Technical Data sheet

The Ilkley Lucite Bath

4-ILK-LEFT-1500-WH

5 Years Warranty

Specification

Brand	House of Piccadilly
Range	The Ilkley
Product code	4-ILK-LEFT-1500-WH
Finish/Colour	White
Product type	Bath
Material	Lucite Acrylic

Technical Information

Freestanding Bath with Supplied Overflow

Capacity - 225L

Net Weight -45kg

Gross Weight -50kg

Box contents:

Freestanding Bath with Supplied Overflow

Click Clack Waste

Drawing

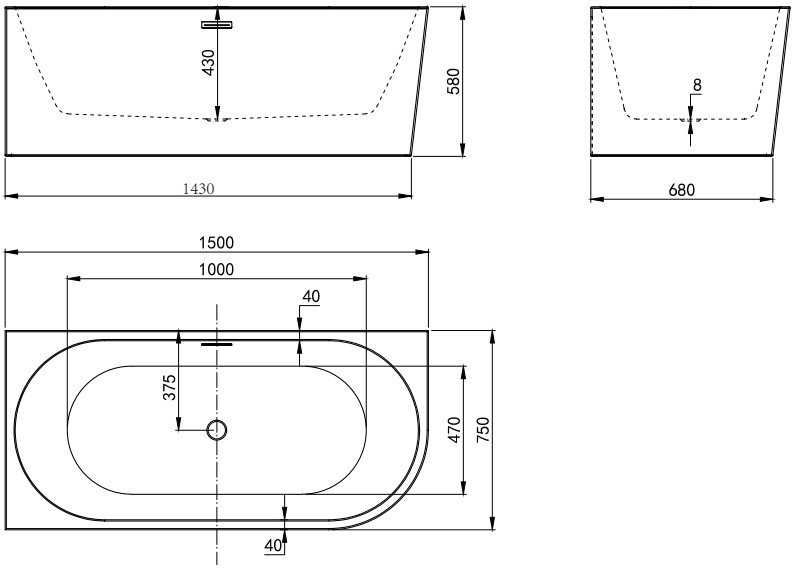

Technical Data sheet

The Ilkley Lucite Bath

4-ILK-LEFT-1700-WH

5 Years Warranty

Specification

Brand	House of Piccadilly
Range	The Ilkley
Product code	4-ILK-LEFT-1700-WH
Finish/Colour	White
Product type	Bath
Material	Lucite Acrylic

Technical Information

Freestanding Bath with Supplied Overflow

Capacity - 230L

Net Weight -48kg

Gross Weight -54kg

Box contents:

Freestanding Bath with Supplied Overflow

Click Clack Waste

Drawing

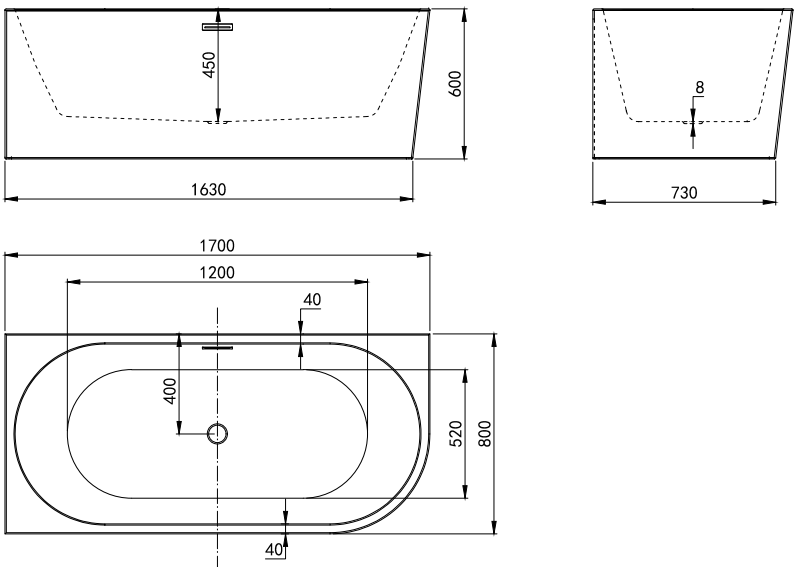

Technical Data sheet

The Ilkley Lucite Bath

4-ILK-RIGHT-1500-WH

5 Years Warranty

Specification

Brand	House of Piccadilly
Range	The Ilkley
Product code	4-ILK-RIGHT-1500-WH
Finish/Colour	White
Product type	Bath
Material	Lucite Acrylic

Technical Information

Freestanding Bath with Supplied Overflow

Capacity - 225L

Net Weight -45kg

Gross Weight -50kg

Box contents:

Freestanding Bath with Supplied Overflow

Click Clack Waste

Drawing

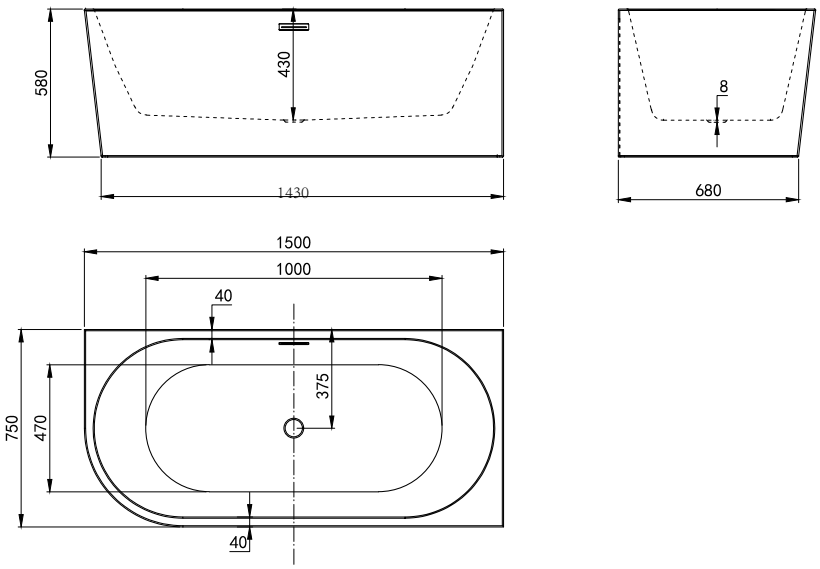

Technical Data sheet

The Ilkley Lucite Bath

4-ILK-RIGHT-1700-WH

5 Years Warranty

Specification

Brand	House of Piccadilly
Range	The Ilkley
Product code	4-ILK-RIGHT-1700-WH
Finish/Colour	White
Product type	Bath
Material	Lucite Acrylic

Technical Information

Freestanding Bath with Supplied Overflow

Capacity - 230L

Net Weight -48kg

Gross Weight -54kg

Box contents:

Freestanding Bath with Supplied Overflow

Click Clack Waste
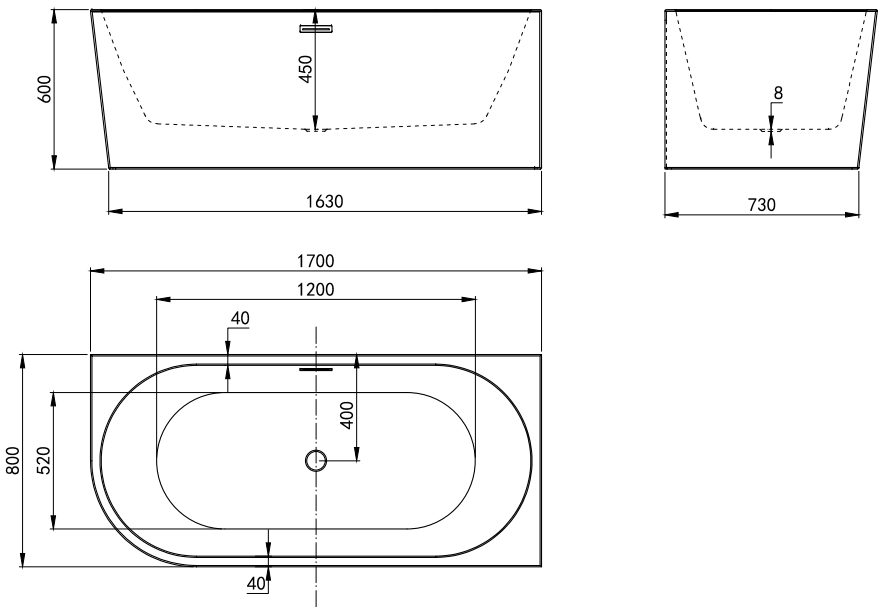
Drawing