The Ilkley

1500 mm left-hand AquaForm acrylic bath

4-ILK-LEFT-1500-WH **WHITE**



PRODUCT SPECIFICATION

Material	**AquaForm Acrylic**
Overall dimensions (L x W x H)	**1500 x 750 x 580 mm**
Handing	**Left-hand**
Colour	**White**
Capacity	**225 L**
Net / gross weight	**45 kg / 50 kg**
Overflow	**Round, pre-drilled**
Guarantee	**5 years**

BOX CONTENTS

AquaForm acrylic bath with pre-drilled round overflow.

GUARANTEE

5 years

TECHNICAL DRAWINGS

Dimensions in mm / Not to scale

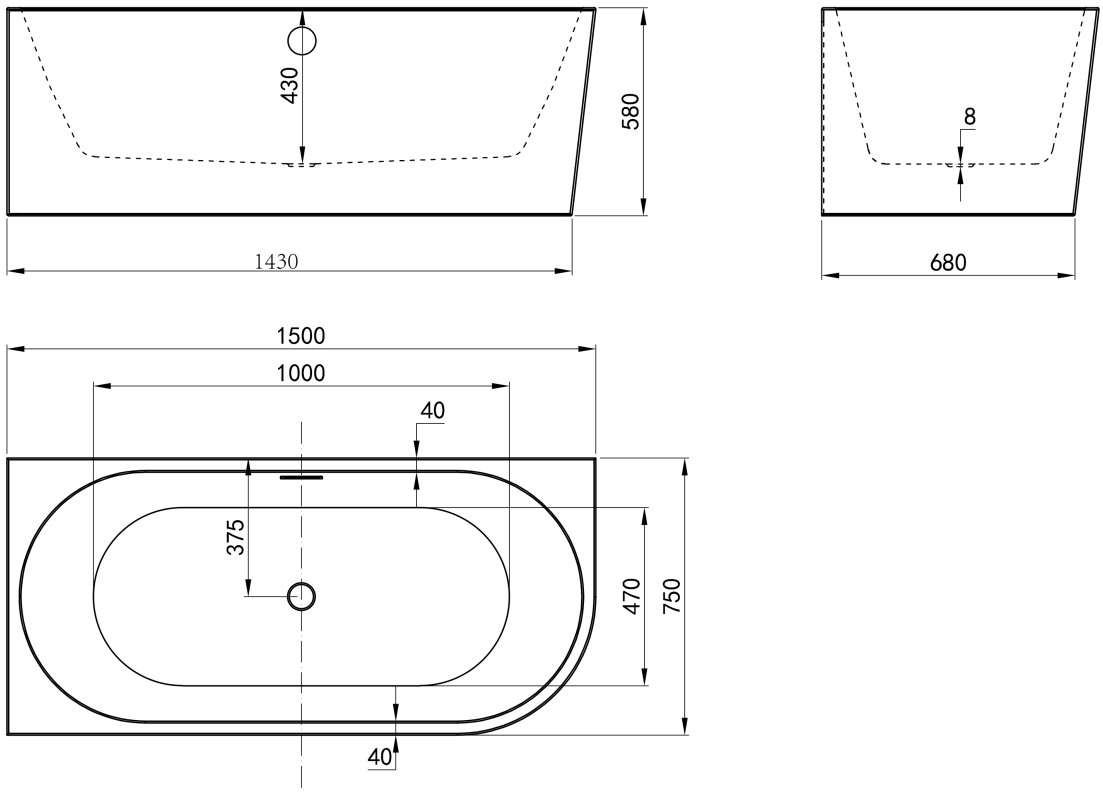

All dimensions are in mm. Drawings are not to scale. House of Piccadilly reserves the right to amend product specifications without prior notice.

The Ilkley

1500 mm right-hand acrylic bath

4-ILK-RIGHT-1500-WH **WHITE**



PRODUCT SPECIFICATION

Material	**Acrylic**
Overall dimensions (L x W x H)	**1500 x 750 x 580 mm**
Handing	**Right-hand**
Colour	**White**
Capacity	**225 L**
Net / gross weight	**45 kg / 50 kg**
Overflow	**Round, pre-drilled**
Guarantee	**5 years**

BOX CONTENTS

Acrylic bath with pre-drilled round overflow.

GUARANTEE

5 years

TECHNICAL DRAWINGS

Dimensions in mm / Not to scale

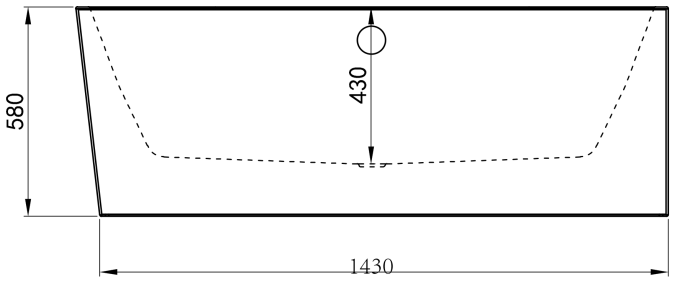

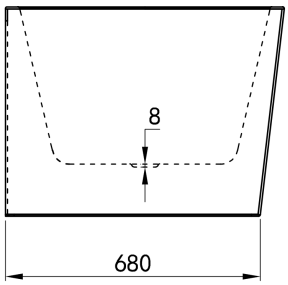

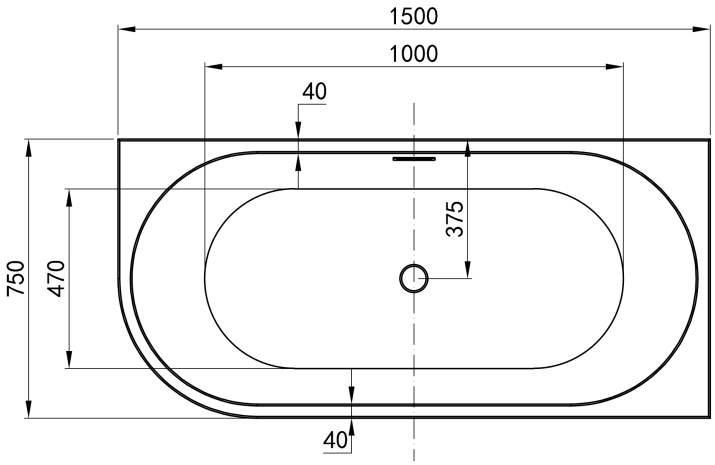

All dimensions are in mm. Drawings are not to scale. House of Piccadilly reserves the right to amend product specifications without prior notice.

The Ilkley

1700 mm left-hand AquaForm acrylic bath

4-ILK-LEFT-1700-WH **WHITE**



PRODUCT SPECIFICATION

Material	**AquaForm Acrylic**
Overall dimensions (L x W x H)	**1700 x 800 x 600 mm**
Handing	**Left-hand**
Colour	**White**
Capacity	**230 L**
Net / gross weight	**48 kg / 54 kg**
Overflow	**Round, pre-drilled**
Guarantee	**5 years**

BOX CONTENTS

AquaForm acrylic bath with pre-drilled round overflow.

GUARANTEE

5 years

TECHNICAL DRAWINGS

Dimensions in mm / Not to scale

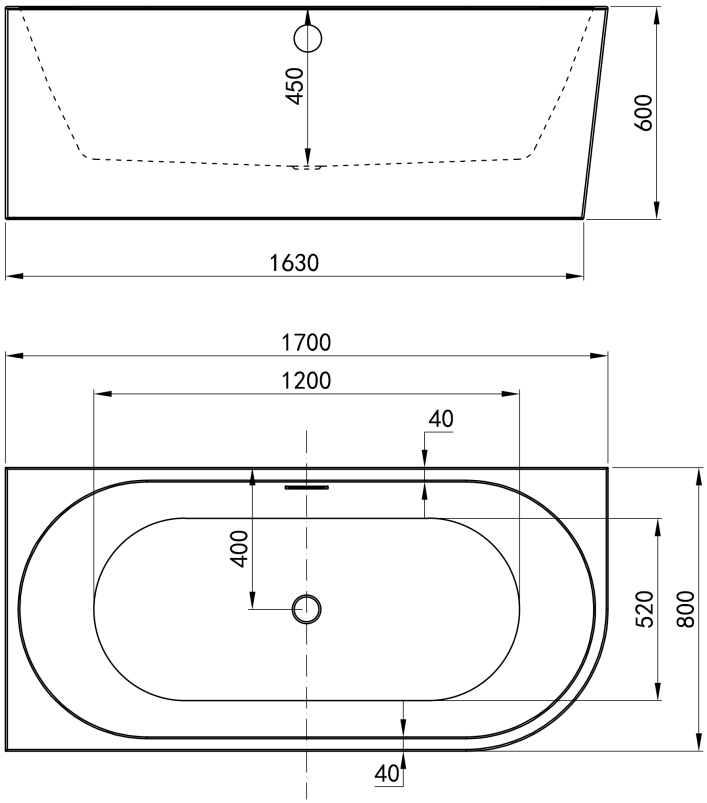

All dimensions are in mm. Drawings are not to scale. House of Piccadilly reserves the right to amend product specifications without prior notice.

The Ilkley

1700 mm right-hand AquaForm acrylic bath

4-ILK-RIGHT-1700-WH **WHITE**



PRODUCT SPECIFICATION

Material	**AquaForm Acrylic**
Overall dimensions (L x W x H)	**1700 x 800 x 600 mm**
Handing	**Right-hand**
Colour	**White**
Capacity	**230 L**
Net / gross weight	**48 kg / 54 kg**
Overflow	**Round, pre-drilled**
Guarantee	**5 years**

BOX CONTENTS

AquaForm acrylic bath with pre-drilled round overflow.

GUARANTEE

5 years

TECHNICAL DRAWINGS

Dimensions in mm / Not to scale

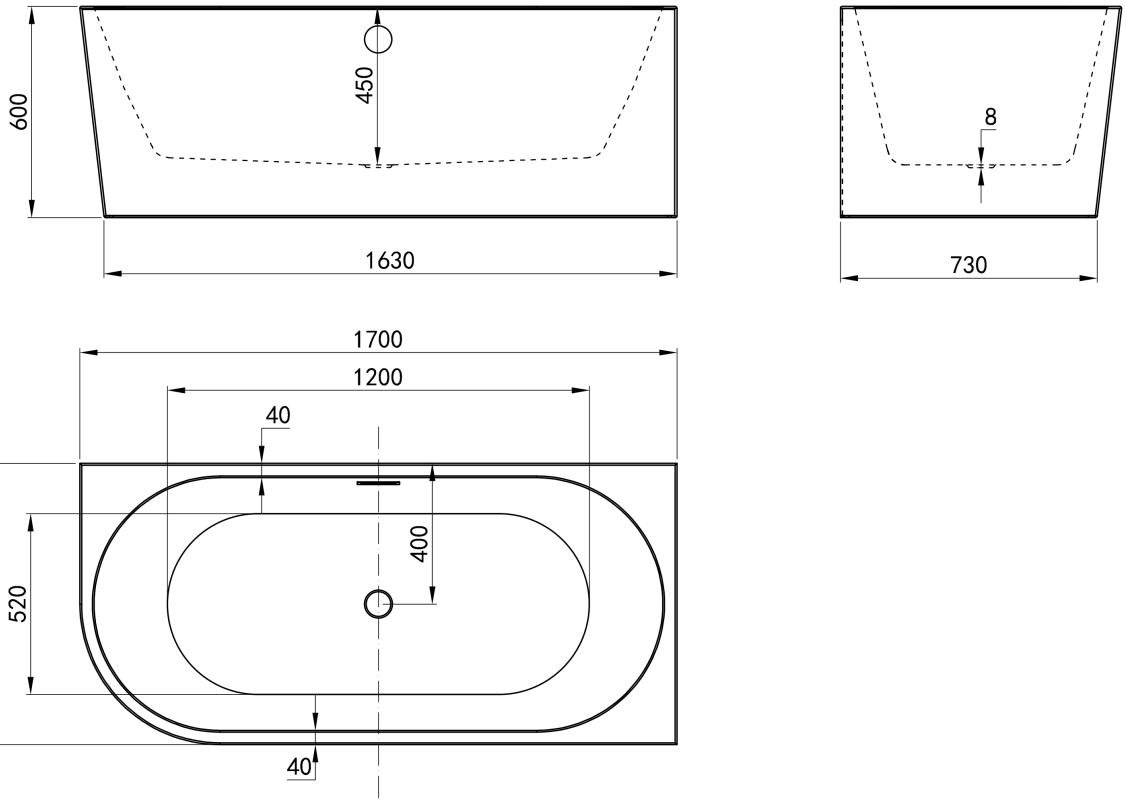

All dimensions are in mm. Drawings are not to scale. House of Piccadilly reserves the right to amend product specifications without prior notice.