Dell Technologies Host Bus Adapter User's Guide

HBA355e Adapter, HBA355i Front, HBA355i Adapter, HBA350i MX, and HBA350i Adapter

Part Number: UCSA-1100, UCSA-1111, UCSF-1100, and UCSN-1100
September 2021
Rev. A02

DELL Technologies

Notes, cautions, and warnings

NOTE: A NOTE indicates important information that helps you make better use of your product.

CAUTION: A CAUTION indicates either potential damage to hardware or loss of data and tells you how to avoid the problem.

WARNING: A WARNING indicates a potential for property damage, personal injury, or death.

© 2020-2021 Dell Inc. or its subsidiaries. All rights reserved. Dell, EMC, and other trademarks are trademarks of Dell Inc. or its subsidiaries. Other trademarks may be trademarks of their respective owners.

Contents

Chapter 1: Dell HBA355i Adapter, Dell HBA355i Front, Dell HBA355e Adapter, Dell HBA350i MX, and Dell HBA350i Adapter 6
Dell HBA355i Adapter 7
Dell HBA355i Front 7
Dell HBA355e Adapter 8
Dell HBA350i MX 8
Dell HBA350i Adapter 9
Dell HBA355i Adapter, Dell HBA355i Front, Dell HBA355e Adapter, Dell HBA350i MX, and Dell HBA350i Adapter technical specifications 9
PowerEdge systems supported by Dell HBA355i Adapter 10
PowerEdge systems supported by Dell HBA355i Front 10
PowerEdge systems supported by Dell HBA355e Adapter 10
PowerEdge systems supported by Dell HBA350i MX 11
PowerEdge systems supported by Dell HBA350i Adapter 11
Operating systems supported by Dell HBA355i Adapter, Dell HBA355i Front, Dell HBA355e Adapter, Dell HBA350i MX, and Dell HBA350i Adapter 11
MD1400 and MD1420 enclosure support for Dell HBA355e Adapter 11
Port support matrix for dual path on the MD1400 and MD1420 enclosures 12
ME484 enclosure support for Dell HBA355e Adapter 12
Port support matrix for dual path on the ME484 enclosure 12
External tape drive support for Dell HBA355e Adapter 13
Internal tape drive support for Dell HBA355i Adapter and Dell HBA350i Adapter 13

Chapter 2: Applications supported by Dell HBA355i Adapter, Dell HBA355i Front, Dell HBA355e Adapter, Dell HBA350i MX, and Dell HBA350i Adapter 14
Human Interface Infrastructure Configuration Utility 14
Dell OpenManage Storage Management 14
The Integrated Dell Remote Access Controller and Lifecycle Controller 14
The Command Line Interface 14

Chapter 3: Multipath support on Dell HBA355e Adapter 15
Dell HBA multipathing using HII 15
Dell HBA multipathing using Windows 15
Dell HBA multipathing using iDRAC 16
Dell HBA multipathing using Linux 16
Dell HBA multipathing using VMware 16

Chapter 4: Features of Dell HBA355i Adapter, Dell HBA355i Front, Dell HBA355e Adapter, Dell HBA350i MX, and Dell HBA350i Adapter 17
Hardware Root of Trust 17
Non–RAID drives 17
Event management support for Dell HBA355i Adapter, Dell HBA355i Front, Dell HBA355e Adapter, Dell HBA350i MX, and Dell HBA350i Adapter 17
LED activity 17

Chapter 5: Installation and removal of cards 19
Safety instructions.....19
Before working inside your system.....19
Remove the Dell HBA355i Adapter 20
Install the Dell HBA355i Adapter.....21
Remove Dell HBA355i Front.....22
Install Dell HBA355i Front..... 23
Remove the Dell HBA355e Adapter..... 24
Install the Dell HBA355e Adapter.....25
Connect Dell HBA355e Adapter to the storage enclosure..... 26
Remove Dell HBA350i MX..... 28
Install Dell HBA350i MX.....29
Remove the Dell HBA350i Adapter 30
Install the Dell HBA350i Adapter.....31

Chapter 6: Driver support for Dell HBA355i Adapter, Dell HBA355i Front, Dell HBA355e Adapter, Dell HBA350i MX, and Dell HBA350i Adapter..... 33
Creating the device driver media..... 33
Download and save Dell HBA355i Adapter, Dell HBA355i Front, Dell HBA355e Adapter, Dell HBA350i MX, and Dell HBA350i Adapter drivers from the support site..... 33
Download and save Dell HBA355i Adapter, Dell HBA355i Front, Dell HBA355e Adapter, Dell HBA350i MX, and Dell HBA350i Adapter drivers from the Dell Systems Service and Diagnostic Tools 34
Windows driver installation..... 34
Install Dell HBA355i Adapter, Dell HBA355i Front, Dell HBA355e Adapter, Dell HBA350i MX, and Dell HBA350i Adapter while newly installing the Windows Server 2016 or later.....34
Install Dell HBA355i Adapter, Dell HBA355i Front, Dell HBA355e Adapter, Dell HBA350i MX, and Dell HBA350i Adapter driver on which the Windows Server 2016 is already installed or later.....35
Update Dell HBA355i Adapter, Dell HBA355i Front, Dell HBA355e Adapter, Dell HBA350i MX, and Dell HBA350i Adapter driver that runs on Windows Server 2016 or later..... 35
Linux driver installation..... 36
Install or update a RPM driver package using the KMOD support..... 36
Install or update a RPM driver package using the KMP support.....36
Load the driver while installing an operating system.....37

Chapter 7: Manage Dell HBA355i Adapter, Dell HBA355i Front, Dell HBA355e Adapter, Dell HBA350i MX, and Dell HBA350i Adapter using HII configuration utility.....38
Enter the HII configuration utility.....38
Exit the HII configuration utility.....39
Navigate to the configuration utility.....39
Controller management 39
View the controller properties.....39
Refresh the topology.....40
Device Properties..... 40

Chapter 8: Update the firmware of Dell HBA355i Adapter, Dell HBA355i Front, Dell HBA355e Adapter, Dell HBA350i MX, and Dell HBA350i Adapter using DUP..... 42
Update firmware controller using Dell Update Package (DUP).....42

Chapter 9: Getting help.....43
Recycling or End-of-Life service information.....43
Contacting Dell.....43
Receiving automated support with SupportAssist.....43

Chapter 10: Troubleshooting.....45
Known issues.....45
VendorID and ProductID for external tape drives.....45
VendorID and ProductID for internal tape drives.....45
System reserved partition after Windows installation.....45
Device settings in HII shows PCIe slot information.....45
Intermittent RSODs appears when a faulty drive is connected to HBA.....45
Selecting drive for operating system installation in legacy mode.....46
Adapter configuration change message.....46
Incompatible firmware image when incorrect payload is used.....46
Additional disks displayed in the command line interface.....46
Intended branding information of the Dell HBA350i Adapter not displayed.....46
Firmware upgrade or downgrade from DUP is not supported on Ubuntu.....47

Chapter 11: Documentation resources.....48

1

Dell HBA355i Adapter, Dell HBA355i Front, Dell HBA355e Adapter, Dell HBA350i MX, and Dell HBA350i Adapter

Dell Technologies Host Bus Adapter 355i (Dell HBA355i Adapter), Dell Technologies Host Bus Adapter 350i MX (Dell HBA350i MX), and Dell Technologies Host Bus Adapter 350i (Dell HBA350i Adapter) are non–RAID solution cards that can be used as a boot controller and also as a data controller.

Dell Technologies Host Bus Adapter 355e(Dell HBA355e Adapter) is a non-RAID solution card that is used as a data controller by connecting to external JBODs and tape drives.

The features of the cards include:

- All are PCIe cards with Gen 4 PCIe x eight host interfaces.
- All provide dual SAS/SATA Gen 3 device interfaces.
- Each supports both SAS and SATA drives.
- HBA355i Adapter and HBA355i Front have x16 SAS lanes for a target device and can support up to 16 drives without expander.
- HBA350i Adapter has x8 SAS lanes for a target device and can support up to eight drives without expander.
- HBA350i MX has x8 lanes and supports up to only eight drives without expander.
- HBA355e has x16 lanes that can be connected to external target devices such as enclosures (ME484, MD1420, and MD1400) and tape drives (LTO6/7/8).

NOTE: For the safety, regulatory, and ergonomic information that is associated with these devices, and for more information about the Integrated Dell Remote Access Controller (iDRAC) or Lifecycle Controller (LC) remote management, see your platform documentation.

Topics:

- Dell HBA355i Adapter
- Dell HBA355i Front
- Dell HBA355e Adapter
- Dell HBA350i MX
- Dell HBA350i Adapter
- Dell HBA355i Adapter, Dell HBA355i Front, Dell HBA355e Adapter, Dell HBA350i MX, and Dell HBA350i Adapter technical specifications
- PowerEdge systems supported by Dell HBA355i Adapter
- PowerEdge systems supported by Dell HBA355i Front
- PowerEdge systems supported by Dell HBA355e Adapter
- PowerEdge systems supported by Dell HBA350i MX
- PowerEdge systems supported by Dell HBA350i Adapter
- Operating systems supported by Dell HBA355i Adapter, Dell HBA355i Front, Dell HBA355e Adapter, Dell HBA350i MX, and Dell HBA350i Adapter
- MD1400 and MD1420 enclosure support for Dell HBA355e Adapter
- Port support matrix for dual path on the MD1400 and MD1420 enclosures
- ME484 enclosure support for Dell HBA355e Adapter
- Port support matrix for dual path on the ME484 enclosure
- External tape drive support for Dell HBA355e Adapter
- Internal tape drive support for Dell HBA355i Adapter and Dell HBA350i Adapter

For more information, see the *Rail Installation Guide* relevant to your rail solutions at www.dell.com/poweredgemanuals.

4. Remove the system cover.

Remove the Dell HBA355i Adapter

Prerequisites

CAUTION: Many repairs may only be done by a certified service technician. You should only perform troubleshooting and simple repairs as authorized in your product documentation, or as directed by the online or telephone service and support team. Damage due to servicing that is not authorized by Dell is not covered by your warranty. Read and follow the safety instructions that are shipped with your product.

- You have read and complied with the safety guidelines listed in Safety instructions.
- You have completed the procedures in Before working inside your system.

Steps

1. Turn off the system, including any attached peripherals, and disconnect the system from the electrical outlet and peripherals.
2. Remove the system cover.
3. Locate the HBA355i Adapter in the expansion riser on the system board.

   CAUTION: To prevent damage to the card, hold the card by its edges only.

4. Unfasten and lift the riser from the system board. Remove the Dell HBA355i card from the system.
5. Disconnect the SAS cables from the card:
   a. Press down and hold the metal tab on the SAS cable connector.
   b. Pull the SAS cable out of the connector.
6. Replace the storage controller and reconnect the SAS cable before inserting them into the riser.
7. Reinstall the riser on the system board and fasten the riser.
8. Install the system cover.
9. Reconnect the system to its electrical outlet and turn the system on, including any attached peripherals.

Figure 6. Remove the Dell HBA355i Adapter

Install the Dell HBA355i Adapter

Prerequisites

CAUTION: Many repairs may only be done by a certified service technician. You should only perform troubleshooting and simple repairs as authorized in your product documentation, or as directed by the online or telephone service and support team. Damage due to servicing that is not authorized by Dell is not covered by your warranty. Read and follow the safety instructions that are shipped with your product.

- You have read and complied with the safety guidelines listed in Safety instructions.
- You have completed the procedures in Before working inside your system.

Steps

1. Turn off the system, including any attached peripherals, and disconnect the system from the electrical outlet.

   NOTE: It is recommended that you always use a static mat and static strap while working on components in the interior of the system.

2. Remove the system cover.
3. Connect the SAS data cable connectors to the card.

   NOTE: Ensure that you connect the cable according to the connector labels on the cable. The cable does not function properly if reversed.

4. Align the card-edge connector with the connector on the system board.

   CAUTION: To prevent damage to the card, hold the card by its edges only.

5. Press the card-edge down until the card is fully seated.
6. Route the SAS cable through the channel on the inner side of the chassis to the backplane.
7. Attach the connector labeled SAS A to connector SAS A on the backplane, and attach the connector labeled SAS B to connector SAS B on the backplane.
8. Install the system cover.
9. Reconnect the system to its electrical outlet and turn the system on, including any attached peripherals.

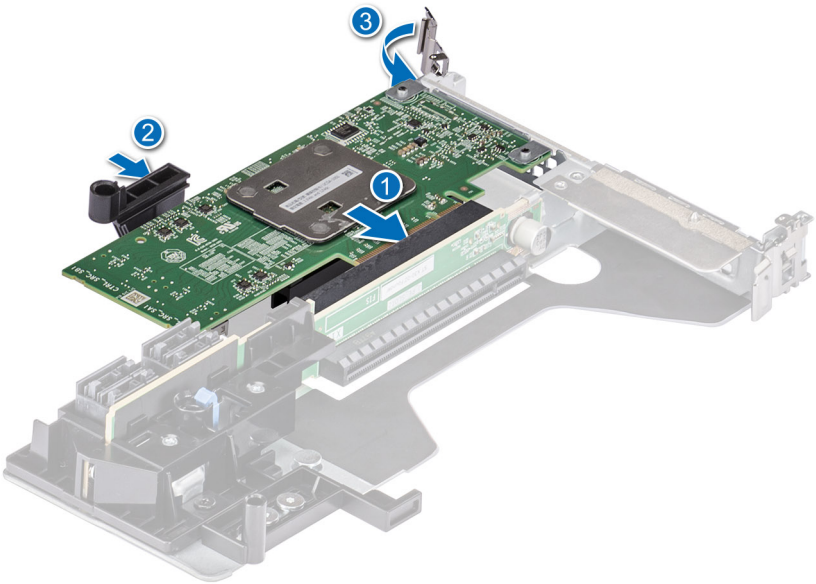

Figure 7. Install the Dell HBA355i Adapter

Remove Dell HBA355i Front

Prerequisites

CAUTION: Many repairs may only be done by a certified service technician. You should only perform troubleshooting and simple repairs as authorized in your product documentation, or as directed by the online or telephone service and support team. Damage due to servicing that is not authorized by Dell is not covered by your warranty. Read and follow the safety instructions that are shipped with your product.

- You have read and complied with the safety guidelines listed in Safety instructions.
- You have completed the procedures in Before working inside your system.

Steps

1. Turn off the system, including any attached peripherals, and disconnect the system from the electrical outlet and peripherals.
2. Remove the system cover.
3. Locate the HBA355i Front card in the controller carrier at the front of the system.

   CAUTION: To prevent damage to the card, hold the card by its edges only.

4. Unscrew the fasteners on the controller carrier, and slide the carrier away from the backplane, disconnecting the controller from the backplane.

   NOTE: For systems configured with HBA355i Front in an upside-down orientation, you must uninstall all the drives from the backplane before uninstalling the backplane along with the controller. There is not enough clearance to uninstall the controller otherwise.

5. Disconnect the SAS cables that are connected to the card:
   a. Press down, and hold the metal tab on the SAS cable connector.
   b. Pull the SAS cable out of the connector.
6. Remove HBA355i Front from the controller carrier.

   NOTE: If the replacement storage controller is a front controller, then reinsert the controller into the carrier and secure it with the appropriate screws.

7. Reconnect the SAS cable to the replacement storage controller before reconnecting the controller to the backplane.
   For systems configured with HBA355i Front in an upside-down orientation, reattach the HBA355i Front to the backplane before reinstalling the backplane into the system.
8. Install the system cover.
9. Reconnect the system to its electrical outlet, and turn the system on, including any attached peripherals.

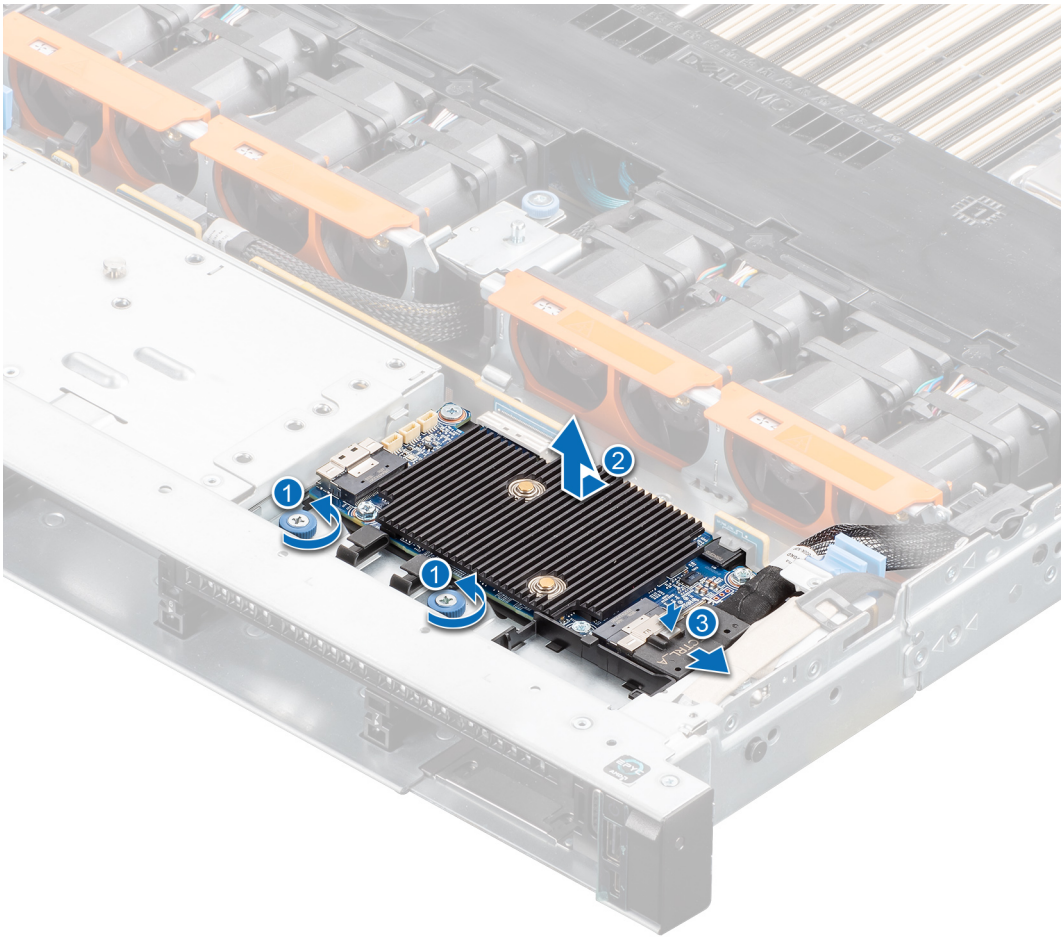

Figure 8. Remove HBA355i Front

Install Dell HBA355i Front

Prerequisites

CAUTION: Many repairs may only be done by a certified service technician. You should only perform troubleshooting and simple repairs as authorized in your product documentation, or as directed by the online or telephone service and support team. Damage due to servicing that is not authorized by Dell is not covered by your warranty. Read and follow the safety instructions that are shipped with your product.

Steps

1. Turn off the system, including any attached peripherals, and disconnect the system from the electrical outlet.
2. Remove the system cover.
3. Connect the SAS data cable connectors to the card.

   NOTE: Ensure that you connect the cable according to the connector labels on the cable. The cable does not function properly if reversed.

4. Align the card-edge connector with the connector on the system board.

   CAUTION: To prevent damage to the card, hold the card by its edges only.

5. Press the card-edge down until the card is fully seated in the connector
6. Install the system cover.

7. Reconnect the system to its electrical outlet and turn the system on, including any attached peripherals.

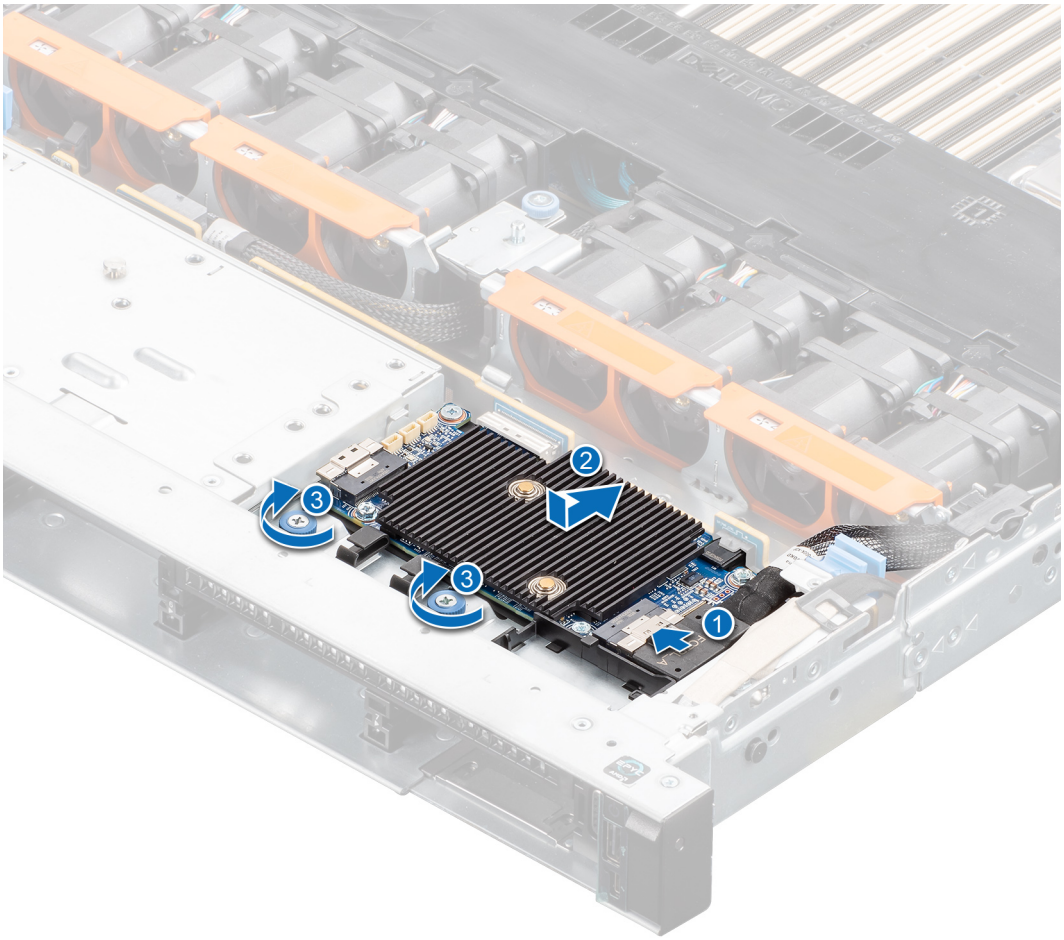

Figure 9. Install HBA355i Front

Remove the Dell HBA355e Adapter

Prerequisites

CAUTION: Many repairs may only be done by a certified service technician. You should only perform troubleshooting and simple repairs as authorized in your product documentation, or as directed by the online or telephone service and support team. Damage due to servicing that is not authorized by Dell is not covered by your warranty. Read and follow the safety instructions that are shipped with your product.

NOTE: It is recommended that you always use a static mat and static strap while working on components inside the system.

- You have read and complied with the safety guidelines listed in Safety instructions.
- You have completed the procedures in Before working inside your system.

Steps

1. Turn off the system, including any attached peripherals, and disconnect the system from the electrical outlet and peripherals.

   NOTE: For more information about power supply units (PSUs), see the owner's manual of your system www.dell.com/poweredgemanuals.

2. Disconnect the system from the network.
3. Remove the cover of the system.

4. Locate the PCIe slot.

   NOTE: To prevent damage to the controller card, hold the card by its edges only.

5. Remove the screws on the bracket, if any, or use the retention clips of the system to remove the controller on the system.
6. Remove the connector that attaches the HBA355e Adapter to the system board.
7. If applicable, replace the storage controller card and connect the cable.
8. Install the system cover.
9. Reconnect the power cables and network cables.

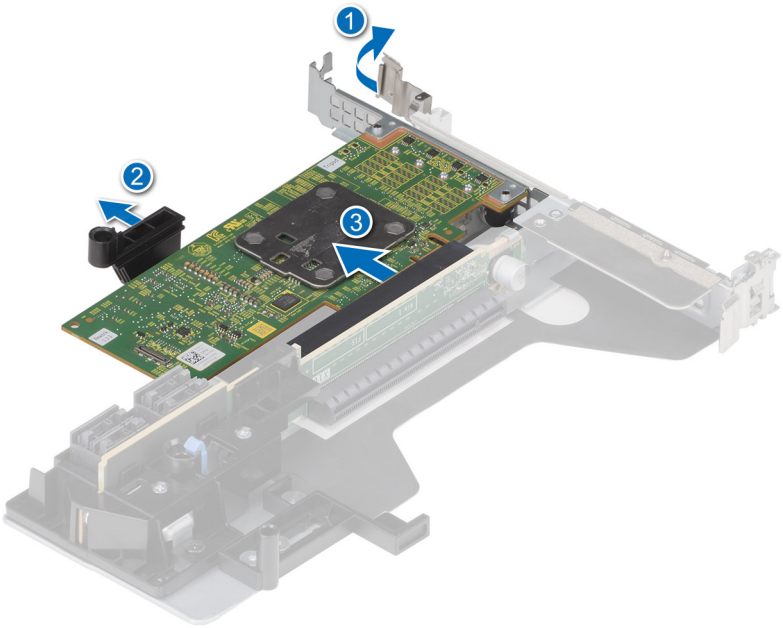

Figure 10. Remove the HBA355e Adapter

Install the Dell HBA355e Adapter

Prerequisites

CAUTION: Many repairs may only be done by a certified service technician. You should only perform troubleshooting and simple repairs as authorized in your product documentation, or as directed by the online or telephone service and support team. Damage due to servicing that is not authorized by Dell is not covered by your warranty. Read and follow the safety instructions that are shipped with your product.

- You have read and complied with the safety guidelines listed in Safety instructions.
- You have completed the procedures in Before working inside your system.

Steps

1. Unpack your HBA355e Adapter.
2. Attach the bracket with the card using the screws provided.
3. Turn off the system, including any attached peripherals, and disconnect the system from the electrical outlet.

   NOTE: For more information about power support units (PSUs), see the owner's manual of your system Dell.com/poweredgemanuals.

4. Disconnect the system from the network.
5. Remove the cover of the system.
6. Select an appropriate PCIe slot.

NOTE: To avoid damage to the controller, hold the controller by its edges only.

7. Align the connector on the HBA355e Adapter with the PCIe slot on the system.
8. Press down the controller until the connectors are firmly engaged.
9. Tighten the screws on the bracket, if any, or use retention clips of the system to secure the controller on the system.
10. Use SAS cables to connect the external tape device or enclosure to the adapter.
11. Install the system cover.
12. Reconnect the power cables and network cables, and then turn on the system.

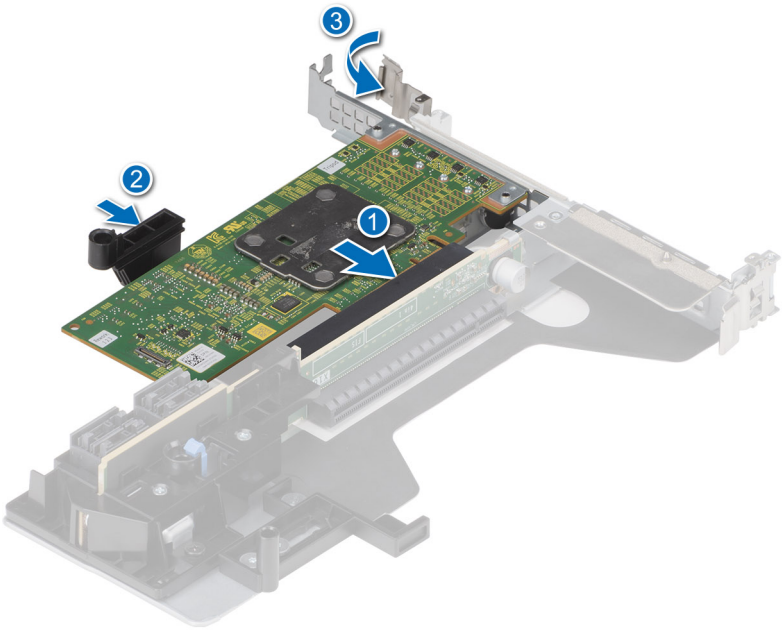

Figure 11. Install the HBA355e Adapter

Connect Dell HBA355e Adapter to the storage enclosure

About this task

Perform the following steps to connect HBA355e Adapter to the hard drives in storage enclosures:

Steps

1. Set up the HBA355e Adapter. See Install the HBA355e card.
2. Connect the SAS cables as shown in the following diagrams.

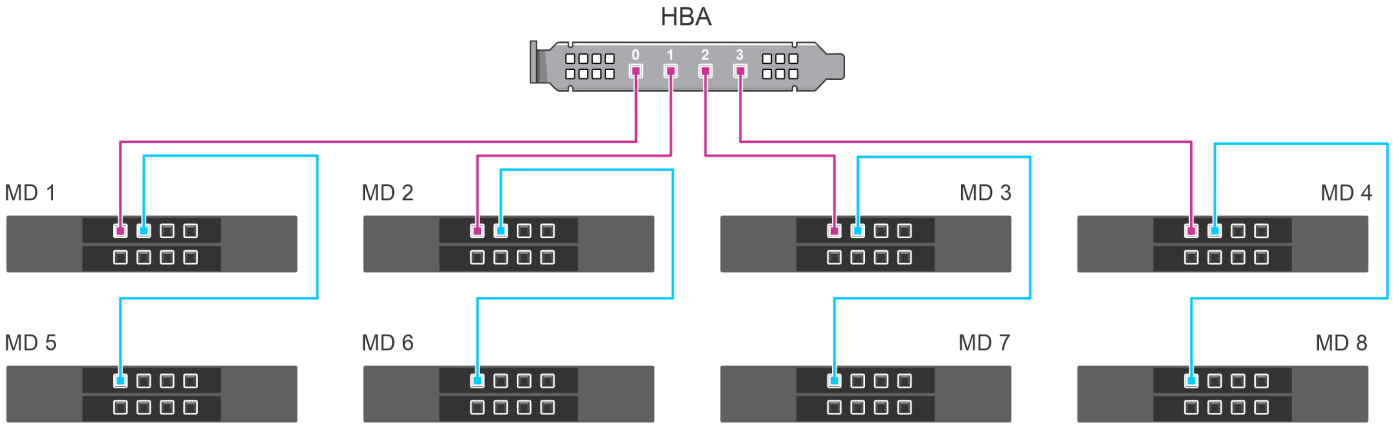

Figure 12. Dual path configuration: Cabling HBA355e Adapter with MD1420 and MD1400 enclosures

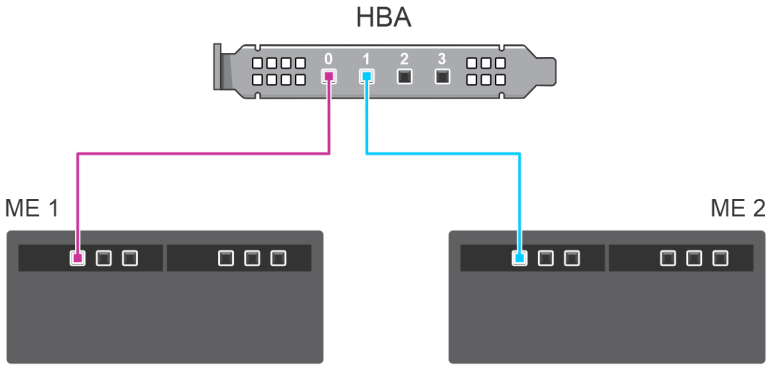

Figure 13. Dual path configuration: Cabling of HBA355e Adapter with ME484 enclosures

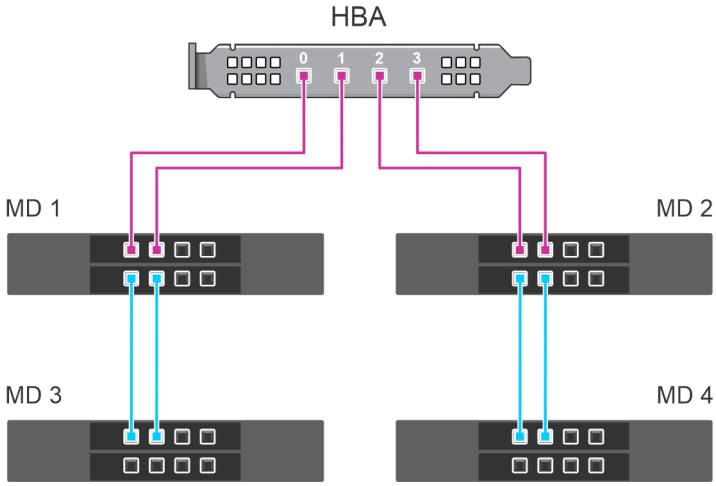

Figure 14. Multipath configuration: Cabling HBA355e Adapter with MD1420 and MD1400 enclosures

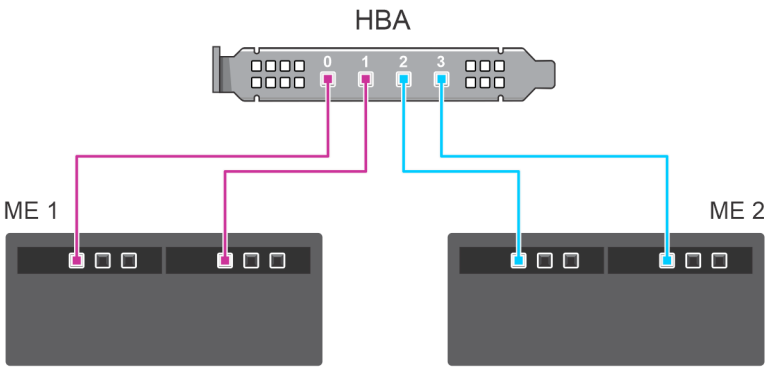

Figure 15. Multipath configuration: Cabling HBA355e Adapter with ME484 enclosures

Remove Dell HBA350i MX

Prerequisites

CAUTION: Many repairs may only be done by a certified service technician. You should only perform troubleshooting and simple repairs as authorized in your product documentation, or as directed by the online or telephone service and support team. Damage due to servicing that is not authorized by Dell is not covered by your warranty. Read and follow the safety instructions that are shipped with your product.

- You have read and complied with the safety guidelines listed in Safety instructions.
- You have completed the procedures in Before working inside your system.

Steps

1. Turn off the sled and any attached peripherals, and remove the sled from the MX chassis.

   NOTE: Perform a graceful shutdown of the sled to ensure that any data in the cache is flushed to the disk before the controller is removed.

   NOTE: It is recommended that you always use a static mat and static strap while working on components inside the system.

2. Remove the system cover.
3. Locate the HBA card on the system board.
4. Pull up the release lever on the controller and lift the card to remove it from the connector on the system board.
5. Disconnect the SAS cables that are connected to the card. To disconnect the cable:
   a. Press down, and hold the metal tab on the SAS cable connector.
   b. Pull the SAS cable out of the connector.
6. Lift one end of the card and angle it to disengage the card from the card connector on the system board.
7. Lift the card from the system board.

   NOTE: To prevent damage to the card, you must hold the card by its edges only.

8. Place the storage controller card and connect the cable. For more information about installing the card, see Install Dell HBA350i MX.
9. Install the system cover.
10. Insert the sled into the chassis and turn on the system and any attached MX chassis peripherals.

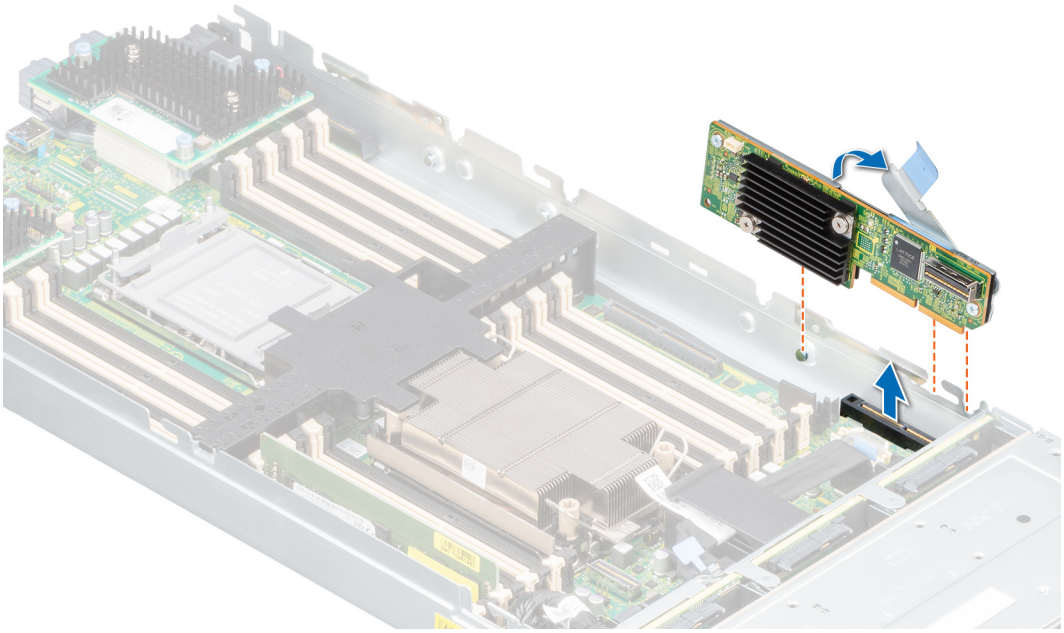

Figure 16. Remove Dell HBA350i MX

Install Dell HBA350i MX

Prerequisites

CAUTION: Many repairs may only be done by a certified service technician. You should only perform troubleshooting and simple repairs as authorized in your product documentation, or as directed by the online or telephone service and support team. Damage due to servicing that is not authorized by Dell is not covered by your warranty. Read and follow the safety instructions that are shipped with your product.

Steps

1. Turn off the sled and any attached peripherals, and remove the sled from the MX chassis.
2. Remove the system cover.
3. Align the bracket notches with the tabs on the sides of the system and align the HBA350i MX card connector with the connector on the system board.

   NOTE: To prevent damage to the card, you must hold the card by its edges only.

4. Press the HBA card onto the connector until it is firmly seated.
5. Press the release latch to secure the card to the sled.
6. Connect the SAS cable connectors to the card.

   NOTE: Ensure that you connect the cable according to the connector labels on the cable. If reversed, the cable does not function properly.

7. Route the SAS data cable through the clip on the card and through the channel on the inner side of the chassis.
8. Attach the connector that is labeled BP SAS to connector SAS A on the backplane, and attach the connector that is labeled CTRL SAS to SAS-cable on the controller card.
9. Install the system cover.
10. Insert the sled into the chassis and turn on the system and any attached MX chassis peripherals.

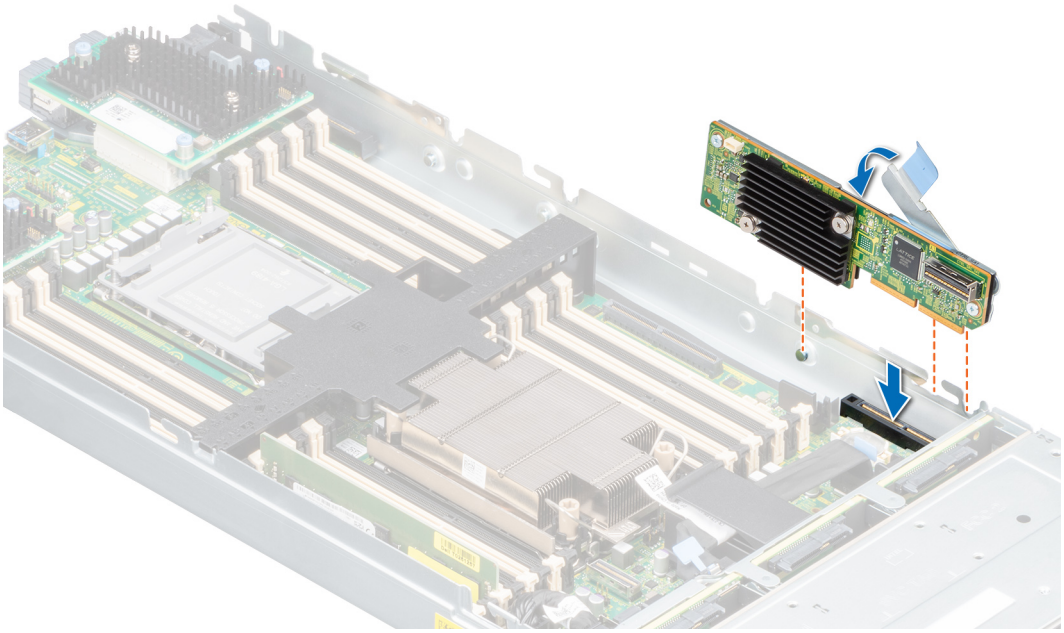

Figure 17. Install Dell HBA350i MX

Remove the Dell HBA350i Adapter

Prerequisites

CAUTION: Many repairs may only be done by a certified service technician. You should only perform troubleshooting and simple repairs as authorized in your product documentation, or as directed by the online or telephone service and support team. Damage due to servicing that is not authorized by Dell is not covered by your warranty. Read and follow the safety instructions that are shipped with your product.

- You have read and complied with the safety guidelines listed in Safety instructions.
- You have completed the procedures in Before working inside your system.

Steps

1. Turn off the system, including any attached peripherals, and disconnect the system from the electrical outlet and peripherals.
2. Remove the system cover.
3. Locate the HBA350i Adapter in the expansion riser on the system board.

   CAUTION: To prevent damage to the card, hold the card by its edges only.

4. Unfasten and lift the riser from the system board. Remove the HBA350i Adapter from the system.
5. Disconnect the SAS cables from the card:
   a. Press down and hold the metal tab on the SAS cable connector.
   b. Pull the SAS cable out of the connector.
6. Place the storage controller and reconnect the SAS cable before inserting them into the riser.
7. Reinstall the riser on the system board and fasten the riser.
8. Install the system cover.
9. Reconnect the system to its electrical outlet and turn the system on, including any attached peripherals.

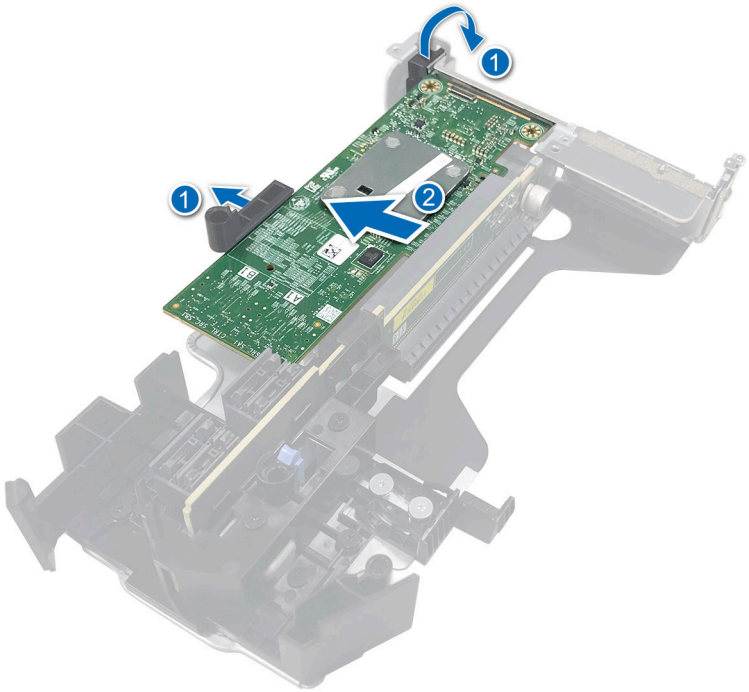

Figure 18. Remove the HBA350i Adapter

Install the Dell HBA350i Adapter

Prerequisites

CAUTION: Many repairs may only be done by a certified service technician. You should only perform troubleshooting and simple repairs as authorized in your product documentation, or as directed by the online or telephone service and support team. Damage due to servicing that is not authorized by Dell is not covered by your warranty. Read and follow the safety instructions that are shipped with your product.

- You have read and complied with the safety guidelines listed in Safety instructions.
- You have completed the procedures in Before working inside your system.

Steps

1. Turn off the system, including any attached peripherals, and disconnect the system from the electrical outlet.

   NOTE: It is recommended that you always use a static mat and static strap while working on components in the interior of the system.

2. Remove the system cover.
3. Connect the SAS data cable connectors to the card.

   NOTE: Ensure that you connect the cable according to the connector labels on the cable. The cable does not function properly if reversed.

4. Align the card-edge connector with the connector on the system board.

   CAUTION: To prevent damage to the card, hold the card by its edges only.

5. Press the card-edge down until the card is fully seated.
6. Route the SAS data cable through the channel on the inner side of the chassis to the backplane.
7. Attach the connector labeled SAS A to connector SAS A on the backplane.
8. Install the system cover.
9. Reconnect the system to its electrical outlet and turn the system on, including any attached peripherals.

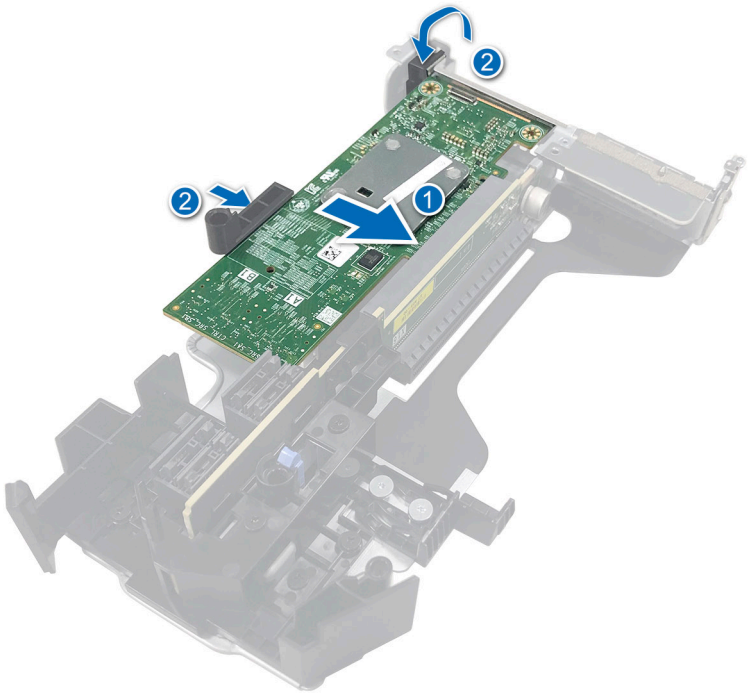

Figure 19. Install the Dell HBA350i Adapter

6

Driver support for Dell HBA355i Adapter, Dell HBA355i Front, Dell HBA355e Adapter, Dell HBA350i MX, and Dell HBA350i Adapter

The HBA350i Adapter, HBA355e Adapter, HBA355i Front, HBA350i MX, and HBA350i Adapter cards require software drivers to operate with the supported operating systems.

This chapter contains the procedures for installing the drivers for the HBA355i Adapter, HBA355e Adapter, HBA355i Front, HBA350i MX, and HBA350i Adapter cards.

NOTE: The driver for HBA355i Adapter, HBA355i Front, HBA350i MX, HBA355e Adapter, and HBA350i Adapter for VMware ESXi is packaged within the VMware ESXi ISO image downloaded from Dell. For more information, see the VMware documentation at www.dell.com/virtualizationsolutions. It is not recommended to have drivers from controllers prior to HBA355e Adapter, HBA355i Adapter, HBA350i MX, HBA355i Front, and HBA350i Adapter on the same system.

The two methods for installing a driver discussed in this chapter are:

- **Installing a driver during operating system installation:** Use this method if you are performing a new installation of the operating system and want to include the drivers.
- **Updating existing drivers:** Use this method if the operating system and the HBA controllers are already installed and you want to update to the latest drivers.

Topics:

- Creating the device driver media
- Windows driver installation
- Linux driver installation
- Load the driver while installing an operating system

Creating the device driver media

Use one of the following two methods to create the device driver media:

- Downloading Drivers From The Dell Support Website
- Downloading Drivers From The Dell Systems Service And Diagnostic Tools Media

Download and save Dell HBA355i Adapter, Dell HBA355i Front, Dell HBA355e Adapter, Dell HBA350i MX, and Dell HBA350i Adapter drivers from the support site

About this task

To download drivers from the Dell Support website:

Steps

1. Go to www.dell.com/support/home.
2. Enter the service tag of your system in the **Choose by Service Tag to get started** field or select **Choose from a list of all Dell products**.
3. Select the **System Type**, **Operating System**, and **Category** from the drop-down list.
   The drivers that are applicable to your selection are displayed.
4. Download the drivers that you require to a USB drive, CD, or DVD.

5. During the operating system installation, use the media that you created to load the driver. For more information on reinstalling the operating system, see the relevant section for your operating system later in this guide.

Download and save Dell HBA355i Adapter, Dell HBA355i Front, Dell HBA355e Adapter, Dell HBA350i MX, and Dell HBA350i Adapter drivers from the Dell Systems Service and Diagnostic Tools

About this task

To download drivers from the **Dell Systems Service and Diagnostic Tools** media:

Steps

1. Insert the **Dell Systems Service and Diagnostics Tools** media in your system.
   The **Welcome to Dell Service and Diagnostic Utilities** screen is displayed.
2. Select your system model and operating system.
3. Click **Continue**.
4. From the list of drivers displayed, select the driver you require.
5. Select the self-extracting ZIP file and click **Run**.
6. Copy the driver to a CD, DVD, or USB drive.
7. Repeat steps 1 to 6 for all the drivers you require.

Windows driver installation

Before you install the Windows driver for Dell HBA355i Adapter, Dell HBA355e Adapter, Dell HBA350i MX, and Dell HBA350i Adapter you must first create a device driver media.

- Read the Microsoft **Getting Started** document that shipped with your operating system.
- Ensure that your system has the latest BIOS, firmware, and driver updates. If required, download the latest BIOS, firmware, and driver updates from www.dell.com/support/home.
- Create a device driver media using one of the methods listed below:
  - USB drive
  - CD
  - DVD

Install Dell HBA355i Adapter, Dell HBA355i Front, Dell HBA355e Adapter, Dell HBA350i MX, and Dell HBA350i Adapter while newly installing the Windows Server 2016 or later

About this task

To install the driver:

Steps

1. Boot the system using the Windows Server 2016, or newer media.
2. Follow the on-screen instructions until you reach **Where do you want to install Windows Server 2016 or later** window and then select **Load driver**.
3. As prompted, insert the installation media and browse to the appropriate location.
4. Select the driver files.
5. Click **Next** and continue installation.

Install Dell HBA355i Adapter, Dell HBA355i Front, Dell HBA355e Adapter, Dell HBA350i MX, and Dell HBA350i Adapter driver on which the Windows Server 2016 is already installed or later

About this task

Perform the following steps to configure the driver for the controller on which the Windows Server 2016 is already installed:

Steps

1. Turn off the system.
2. Install the new SAS controller in the system.
   For detailed instructions on installing the controller in the system, see ,Installation and removal of cards .
3. Turn on the system.
   The **Found New Hardware Wizard** screen displays the detected hardware device.
4. Click **Next**.
5. On the **Locate device driver** screen, select **Search for a suitable driver for my device** and click **Next**.
6. Browse and select the drivers from the **Locate Driver Files** screen.
7. Click **Next**.
8. Click **Finish** to complete the installation.
9. Reboot the system when prompted.

Update Dell HBA355i Adapter, Dell HBA355i Front, Dell HBA355e Adapter, Dell HBA350i MX, and Dell HBA350i Adapter driver that runs on Windows Server 2016 or later

Prerequisites

NOTE: Close all applications on your system before you update the driver.

Steps

1. Insert the media containing the driver.
2. Select **Start** > **Settings** > **Control Panel** > **System.**
   The **System Properties** screen is displayed.
   NOTE: The path to **System** might vary depending on the operating system family.
3. Click the **Hardware** tab.
4. Click **Device Manager**.
   The **Device Manager** screen is displayed.
   NOTE: The path to **Device Manager** might vary depending on the operating system family.
5. Expand **Storage Controllers** by double-clicking the entry or by clicking on the plus (+) symbol next to **Storage Controllers**.
6. Double-click the controller for which you want to update the driver.
7. Click the **Driver** tab and click **Update Driver**.
   The screen to update the device driver wizard is displayed.
8. Select **Install from a list or specific location**.
9. Click **Next**.
10. Follow the steps in the wizard and browse to the location of the driver files.
11. Select the INF file from the drive media.
12. Click **Next** and continue the installation steps in the wizard.
13. Click **Finish** to exit the wizard and reboot the system for the changes to take place.

NOTE: Dell provides the Dell Update Package (DUP) to update drivers on systems running Windows Server 2016 and newer operating system. DUP is an executable application that updates drivers for specific devices. DUP supports command line interface and silent execution. For more information, see https://www.dell.com/support.

Linux driver installation

The driver update disk (DUD) images are created only for those operating system releases in which the native (in-box) driver is insufficient for installation. In the event that an operating system is being installed with a corresponding DUD image, see, Installing or updating the RPM driver package with KMOD support. If not, proceed with using the native device driver and then skip to the topic Installing or Updating the RPM Driver Package With KMP Support.

NOTE: The driver update disk (DUD) images are created only for those operating system releases in which the native (in-box) driver is insufficient for installation. In the event that an operating system is being installed with a corresponding DUD image, follow the instructions below.

NOTE: To view the complete list of boot loader options, see the installation guide of your operating system.

NOTE: If using out-of-box drivers with RHEL 7 and higher, a tainted kernel message will be displayed in the log. RedHat does not provide a mechanism to sign external drivers for RHEL.

Install or update a RPM driver package using the KMOD support

Prerequisites

NOTE: This procedure is applicable for Red Hat Enterprise Linux 7.x and higher.

About this task

Perform the following steps to install the RPM package with KMOD support:

Steps

1. Uncompress the gzipped tarball driver release package.
2. Install the driver package using the command: `rpm -ihv kmodmegaraid_ sas-<version>.rpm`.

   NOTE: Use `rpm -Uvh <package name>` when upgrading an existing package.

3. If the previous device driver is in use, you must reboot the system for the updated driver to take effect.
4. Verify the loaded driver version by running the following command: `modinfo megaraid_sas`.

Install or update a RPM driver package using the KMP support

Prerequisites

NOTE: This procedure is applicable for SUSE Enterprise Linux 15.x.

About this task

Perform the following steps to install the RPM package with KMP support:

Steps

1. Uncompress the gzipped tarball driver release package.
2. Install the driver package using the commands:
   - Use `rpm -Uvh kmod-mpt3sasxxxxxx.rpm` to update an existing package.
   - Use `rpm -ivh kmod-mpt3sasxxxxx.rpm` to install the package.
3. If the previous device driver is in use, you must reboot the system for the updated driver to take effect.

4. Verify the loaded driver version by running the following command: `modinfo megaraid_sas`.

Upgrading the Kernel

About this task

When upgrading to a new kernel, you must reinstall the DKMS-enabled driver packages. Perform the following steps to update or install the driver for a new kernel:

Steps

1. At a **terminal** window, type the following: `dkms build -m <module_name> - v <module version> - k <kernel version> dkms install -m <module_name> - v <module version> - k <kernel version>`.
2. To check if the driver is successfully installed in the new kernel, type: `dkms status`.
   A message similar to the following is displayed: `<driver name>, <driver version>, <new kernel version>: installed`.
3. If the previous device driver is in use, you must restart the system for the updated driver to take effect.

Load the driver while installing an operating system

Steps

1. Perform the following operation to install the driver media:
   a. Download the HBA linux driver ISO, or install the LC driver pack.
   b. Mount the ISO to the Server, burn the ISO to CD/DVD, or copy the ISO file to USB. The USB has to match with the ISO.
   c. For LC driver pack, boot the life-cycle controller and go through the operating system deployment wizard.
2. Boot to the installer.
3. In the Installation screen, press E.
4. Perform the following operation:
   - If the operating system is Red Hat Enterprise Linux 7 or Red Hat Enterprise Linux 8, the CLI displays the syntax `vmlinuz`. Enter **inst.dd**.

     For example, when you are prompted with the command `vmlinuz intrd=initrd.img inst.stage2=hd:LABEL=RHEL-7.0\x20x86_64 quiet inst.dd`.

   - If the operating system is SLES 15, the CLI displays the syntax `linuxefi..` Enter **dud=1**.

     For example, when you are prompted with the command `linuxefi/boot/x86_64/loader/linux splash=silent dud=1`.

   NOTE: Boot parameters may vary based on the operating system version. See operating system installation manuals for exact boot parameter syntax.

5. Attach the driver media (ISO, USB).
6. Press F10 to boot to the operating system.
   A screen is displayed prompting you to select the driver media (USB, CD, ISO, and so on).
7. When prompted, select the driver media.
   If applicable select the HBA driver `...mpt3sas...`

   NOTE: Ensure that the driver is selected with an X symbol.

8. Extract or load the driver.
9. Before proceeding or exiting the driver select menu, disconnect the driver media.

   NOTE: Ensure that you disconnect the driver media so that the drivers are loaded successfully. If the installation media is deleted, reattach it.

10. Press C or exit to go to the installation.

7

Manage Dell HBA355i Adapter, Dell HBA355i Front, Dell HBA355e Adapter, Dell HBA350i MX, and Dell HBA350i Adapter using HII configuration utility

The Human Interface Infrastructure (HII) configuration utility is a storage management application integrated into the System BIOS <F2>. It is used to manage physical disks. This utility is independent of the operating system. The HII configuration utility is a standardized way of viewing and setting device configuration. The HII configuration utility provides pre-operating system functionality and management for the following:

- Viewing physical device properties.
- Running physical device operations.
- Retrieving debug information.

Topics:

- Enter the HII configuration utility
- Exit the HII configuration utility
- Navigate to the configuration utility
- Controller management

Enter the HII configuration utility

About this task

Perform the following steps to boot to the HII configuration utility:

Steps

1. To view **System Setup**, power on the system, press F2, and click **System Setup Main Menu**.
   The System Setup Main Menu screen details are described as follows:

   Table 6. System setup menu

Option	Description
System BIOS	Configure BIOS settings.
iDRAC Settings	Configure iDRAC settings. The iDRAC settings utility is an interface that is used to set up and configure the iDRAC parameters by using Unified Extensible Firmware Interface (UEFI). You can enable or disable various iDRAC parameters by using the iDRAC settings utility. For more information about this utility, see the iDRAC user's guide at https://www.dell.com/poweredgemanuals
Device Settings	Configure device settings for devices such as storage controllers and network cards.

2. Click **Device Settings**.

   To access the management menu for the controller, use the arrow keys or the mouse.

   NOTE: For more information these options, click **Help** on the upper-right corner of the browser screen.

Exit the HII configuration utility

About this task

To exit the HII configuration utility (Ctrl+C), perform the following steps:

Steps

1. Press Esc on any menu screen.
   If there is only one controller, then a dialog box is displayed to confirm your choice.
2. Select **OK** to exit and press Enter.
   If multiple controllers are present, then the Esc key brings you to the **Controller Selection** screen.
3. Press Esc again to reach the exit screen.
   A dialog box is displayed to confirm your choice.
4. Select **OK** to exit and press Enter.

Navigate to the configuration utility

About this task

NOTE: You can follow this procedure for all the cards to navigate to the configuration utility.

Steps

1. Enter the HII configuration utility. See Enter the HII configuration utility.
   The **Device Settings** screen displays a list of NIC ports and the Dell HBA355i Front configuration utility.
2. To access the HBA355i Front configuration utility, click **Dell HBA355i Front Configuration Utility**.
   The following list of configuration options is displayed:
   - Controller Properties
   - Refresh Topology
   - Device Properties

Controller management

Controller management allows you to configure, manage, and view the controller properties.

NOTE: Follow the procedure explained in this section for all the cards by selecting the respective card name.

View the controller properties

The **View Controller Properties** screen allows you to view the controller properties.

In the **System Setup Main Menu**, click **Device Settings** > **Dell HBA355i Front Configuration Utility** > **Controller Management** > **View Controller Properties**

The table explains the **View Controller Properties** screen details:

Table 7. View Controller Properties options

Option	Description
Controller name	Controller name
Chip name	Controller chip name
PCI revision ID	Controller PCI revision ID
PCI Bus:Dev:Func	PCI Bus: Device: Controller function format

Table 7. View Controller Properties options (continued)

Option	Description
PCI Ven: Dev	Controller PCI Vendor ID and Device ID
PCI SSVen:SSDev	Controller PCI Sub Vendor ID and Sub Device ID
SAS address	Controller SAS Address
Package version	Controller package version
Number of SAS and SATA Devices*	Number of SAS and SATA devices supported
Number of enclosures*	Number of controller enclosures

*This option is displayed only after you refresh the topology.

Refresh the topology

Refresh topology allows you to rediscover the devices. It also helps you detect changes in the devices that are connected to the controller.

Steps

1. In the **System Setup Main Menu**, click **Device Settings** > **Dell HBA355i Front Configuration Utility** > **Controller Management** > **Refresh Topology**.
2. Click **Ok** to refresh the topology.
   A screen is displayed **topology refresh process is completed successfully**.
3. Click **Ok** to continue.

Device Properties

Device properties allows you to view the properties of the device.

Steps

1. To view the **Device Properties** screen, power on the system, press F2, and click **System Setup Main Menu > Device Settings > Dell HBA355i Front Configuration Utility > Device Properties > Logical Enclosure (Bay ID=1, Enclosure Level=1)**.

   ### Table 8. Logical Enclosure (Bay ID=1, Enclosure Level=1) properties

Option	Description
Enclosure logical ID	Logical ID of the enclosure
Enclosure level	Level of the enclosure
Bay ID	Bay ID of the enclosure
Vendor name	Vendor name of the enclosure
Product name	Product name of the enclosure
Product revision	Product revision of the enclosure
Number of slots	Number of slots that the enclosure supports

2. Click <Slot 0> SAS SSD drive model to view the properties on this device.
   If the physical disk ID has the letter **M** next to it, the disk has multiple paths that are connected to the system.

   ### Table 9. Device at Slot 0 Logical Enclosure 1 properties

Option	Description
Device type	Type of the drive

Table 9. Device at Slot 0 Logical Enclosure 1 properties (continued)

Option	Description
Protocol	The drive protocol
Slot number	Drive slot number in the enclosure
Connector name	Name of the port as displayed in the utility
Vendor name	Vendor name of the drive
Product name	Product name of the drive
Revision name	Revision version of the drive
Serial number	Serial number of the drive
Capacity	Capacity of the drive
Logical/Physical sector size	Sector size of the selected drive
Multipath device	Drive supports multipath or not
SAS address	SAS address of the drive
Negotiated logical link rate	Negotiated logical link rate of the device
Negotiated physical link rate	Negotiated physical link rate of the device
Maximum drive rate	Maximum possible drive rate
Write cache	You can either enable or disable the Write Cache
Locate LED	You can either select On or Off the locate LED
Legacy OpROM boot device	You can either select Yes or No

3. Click **Apply Changes** to submit the changes selected.
   A confirmation screen is displayed. Click **Ok** to continue.
4. To choose another device click **Next Device in this Enclosure**.

8

Update the firmware of Dell HBA355i Adapter, Dell HBA355i Front, Dell HBA355e Adapter, Dell HBA350i MX, and Dell HBA350i Adapter using DUP

Topics:

- Update firmware controller using Dell Update Package (DUP)

Update firmware controller using Dell Update Package (DUP)

Steps

1. Navigate to www.dell.com/support/home.
2. Locate your controller.
3. Download the DUP.
   a. For Window/iDRAC update, download Windows executable file.
   b. For Linux update, download **.bin** file.

   NOTE: For VMware, firmware should be updated through iDRAC or the PERC CLI utility.

4. Install the DUP.
   a. For Windows, run the executable in Windows environment.
   b. For Linux, run **.bin** file in Linux environment.
   c. For iDRAC, navigate to **system iDRAC** > **Maintenance** > **System Update**, upload Windows executable, and then install.

9

Getting help

Topics:

- Recycling or End-of-Life service information
- Contacting Dell
- Receiving automated support with SupportAssist

Recycling or End-of-Life service information

Take back and recycling services are offered for this product in certain countries. If you want to dispose of system components, visit www.dell.com/recyclingworldwide and select the relevant country.

Contacting Dell

Dell provides online and telephone based support and service options. If you do not have an active internet connection, you can find Dell contact information on your purchase invoice, packing slip, bill or Dell product catalog. The availability of services varies depending on the country and product, and some services may not be available in your area. To contact Dell for sales, technical assistance, or customer service issues:

Steps

1. Go to www.dell.com/support/home.
2. Select your country from the drop-down menu on the lower right corner of the page.
3. For customized support:
   a. Enter the system Service Tag in the **Enter a Service Tag, Serial Number, Service Request, Model, or Keyword** field.
   b. Click **Submit**.
   The support page that lists the various support categories is displayed.
4. For general support:
   a. Select your product category.
   b. Select your product segment.
   c. Select your product.
   The support page that lists the various support categories is displayed.
5. For contact details of Dell Global Technical Support:
   a. Click Global Technical Support.
   b. The **Contact Technical Support** page is displayed with details to call, chat, or e-mail the Dell Global Technical Support team.

Receiving automated support with SupportAssist

Dell EMC SupportAssist is an optional Dell EMC Services offering that automates technical support for your Dell EMC server, storage, and networking devices. By installing and setting up a SupportAssist application in your IT environment, you can receive the following benefits:

- Automated issue detection — SupportAssist monitors your Dell EMC devices and automatically detects hardware issues, both proactively and predictively.
- Automated case creation — When an issue is detected, SupportAssist automatically opens a support case with Dell EMC Technical Support.

- Automated diagnostic collection — SupportAssist automatically collects system state information from your devices and uploads it securely to Dell EMC. This information is used by Dell EMC Technical Support to troubleshoot the issue.
- Proactive contact — A Dell EMC Technical Support agent contacts you about the support case and helps you resolve the issue.

The available benefits vary depending on the Dell EMC Service entitlement purchased for your device. For more information about SupportAssist, go to www.dell.com/supportassist.

10

Troubleshooting

To get help with your Dell EMC Host Bus Adapter series, you can contact your Dell Technical Service representative or see https://www.dell.com/support.

Topics:

- Known issues

Known issues

This section explains the known issues and expected behavior of the system when using the Host Bus Adapter.

VendorID and ProductID for external tape drives

Description	When tape drive is connected to Dell HBA355e Adapter, the **VendorID** is displayed as `Dell` and **ProductID** is displayed as `Non-vSES` in all management interfaces.
Applies to	HBA355e Adapter

VendorID and ProductID for internal tape drives

Description	When a tape drive is connected to Dell HBA355i Adapter or Dell HBA350i Adapter, the **VendorID** is displayed as `DP` and **ProductID** is displayed as `BP15G` in all management interfaces.
Applies to	HBA355i Adapter and HBA350i Adapter

System reserved partition after Windows installation

Description	After the Windows operating system is installed, a system reserved partition may be created other than the drive you have selected.
Applies to	Dell HBA355i Adapter, Dell HBA355i Front, and Dell HBA350i MX

Device settings in HII shows PCIe slot information

Description	In HII (**System Setup** > **Device Settings**) show additional PCI slot information for Dell HBA355i Front form factor.
Applies to	HBA355i Front

Intermittent RSODs appears when a faulty drive is connected to HBA

Description	During pre-boot or refresh in HII, intermittent RSODs are displayed when faulty drive is connected to the system.

Applies to	Dell HBA355i Adapter, Dell HBA355e Adapter, and Dell HBA350i MX

Selecting drive for operating system installation in legacy mode

Description	While installing an operating system in the Legacy BIOS mode, select one drive as the **Legacy OProm Boot Device** and use that device as the installation target to boot successfully.
Applies to	Dell HBA355i Adapter, Dell HBA355i Front, and Dell HBA350i MX

Adapter configuration change message

Description	When you perform controller migration multiple times between systems, Legacy BIOS displays the message `Adapter configuration may have changed, reconfiguration is suggested`.
Cause	This error indicates that corresponding drives attached to the controller might not be enumerated properly.
Solution	Avoid controller migration multiple times between systems.
Applies to	Dell HBA355i Adapter, Dell HBA355e Adapter, Dell HBA355i Front, and Dell HBA350i MX

Incompatible firmware image when incorrect payload is used

Description	If you have selected an incorrect firmware payload using the PERC CLI to update the controller firmware, the controller is updated with an incompatible firmware image without any notification.
Cause	Incorrect firmware payload is selected.
Solution	Select the correct firmware and run the firmware update again.
Applies to	Dell HBA355i Adapter, Dell HBA355e Adapter, and Dell HBA350i MX

Additional disks displayed in the command line interface

Description	If a ME484 enclosure is connected to Dell HBA355e Adapter, additional disks with 0 KB are displayed in the physical disklist (PDlist) output of the PERC CLI commands (`show` and `show all`).
Applies to	HBA355e Adapter

Intended branding information of the Dell HBA350i Adapter not displayed

Description	The **Subsystem** is displayed as **Dell Device 2175** instead of **Dell HBA350i Adapter** for Linux. In ESXi, the controller is displayed as **Fusion-MPT 12GSAS/PCIe Secure SAS38xx** instead of **HBA350i Adapter**. In Windows, the controller is displayed as **Broadcom Fusion-MPT 12GSAS/PCIe Secure SAS38xx** instead of **HBA350i Adapter**
Solution	This issue will be resolved in the upcoming release.
Applies to	HBA350i Adapter

Firmware upgrade or downgrade from DUP is not supported on Ubuntu

Description	DUP is not supported on Ubuntu.
Solution	Perform the firmware upgrade or downgrade using PERC CLI command `perccli /cx download file = HBAxxxx.bin`, where *x* is controller number.
Applies to	Dell HBA355i Adapter, Dell HBA355e Adapter, Dell HBA350i Adapter, Dell HBA355i Front, and Dell HBA350i MX

11

Documentation resources

This section provides information about the documentation resources for your system.

To view the document that is listed in the documentation resources table:

- From the Dell EMC support site:
  1. Click the documentation link that is provided in the Location column in the table.
  2. Click the required product or product version.

     NOTE: To locate the product name and model, see the front of your system.
  3. On the Product Support page, click **Manuals & documents**.
- Using search engines:
  - Type the name and version of the document in the search box.

Table 10. Additional documentation resources for your system

Task	Document	Location
Setting up your system	For more information about installing and securing the system into a rack, see the Rail Installation Guide included with your rail solution. For information about setting up your system, see the *Getting Started Guide* document that is shipped with your system.	www.dell.com/poweredgemanuals
Configuring your system	For information about the iDRAC features, configuring and logging in to iDRAC, and managing your system remotely, see the Integrated Dell Remote Access Controller User's Guide. For information about understanding Remote Access Controller Admin (RACADM) subcommands and supported RACADM interfaces, see the RACADM CLI Guide for iDRAC. For information about Redfish and its protocol, supported schema, and Redfish Eventing implemented in iDRAC, see the Redfish API Guide. For information about iDRAC property database group and object descriptions, see the Attribute Registry Guide. For information about Intel QuickAssist Technology, see the Integrated Dell Remote Access Controller User's Guide.	www.dell.com/poweredgemanuals

Table 10. Additional documentation resources for your system (continued)

Task	Document	Location
	For information about earlier versions of the iDRAC documents. To identify the version of iDRAC available on your system, on the iDRAC web interface, click **?** > **About**.	www.dell.com/idracmanuals
	For information about installing the operating system, see the operating system documentation.	www.dell.com/operatingsystemmanuals
	For information about updating drivers and firmware, see the Methods to download firmware and drivers section in this document.	www.dell.com/support/drivers
Managing your system	For information about systems management software offered by Dell, see the Dell OpenManage Systems Management Overview Guide.	www.dell.com/poweredgemanuals
	For information about setting up, using, and troubleshooting OpenManage, see the Dell OpenManage Server Administrator User's Guide.	www.dell.com/openmanagemanuals > OpenManage Server Administrator
	For information about installing and using Dell SupportAssist, see the Dell EMC SupportAssist Enterprise User's Guide.	https://www.dell.com/serviceabilitytools
	For information about partner programs enterprise systems management, see the OpenManage Connections Enterprise Systems Management documents.	www.dell.com/openmanagemanuals
	Understanding event and error messages	For information about the event and error messages generated by the system firmware and agents that monitor system components, go to qrl.dell.com > **Look Up** > **Error Code**, type the error code, and then click **Look it up**. www.dell.com/qrl
Troubleshooting your system	For information about identifying and troubleshooting the PowerEdge server issues, see the Server Troubleshooting Guide.	www.dell.com/poweredgemanuals