The Ella

420 mm countertop AquaStone basin

8-ELL-WH MATT WHITE



PRODUCT SPECIFICATION

Material	**Stone Resin**
Overall dimensions (L x W x H)	**420 x 340 x 150 mm**
Installation type	**Countertop**
Colour	**Matt White**
Waste	**Click clack waste (Matt White)**
Guarantee	**Lifetime**

BOX CONTENTS

AquaStone basin with click clack waste (Matt White).

GUARANTEE

Lifetime

TECHNICAL DRAWINGS

Dimensions in mm / Not to scale

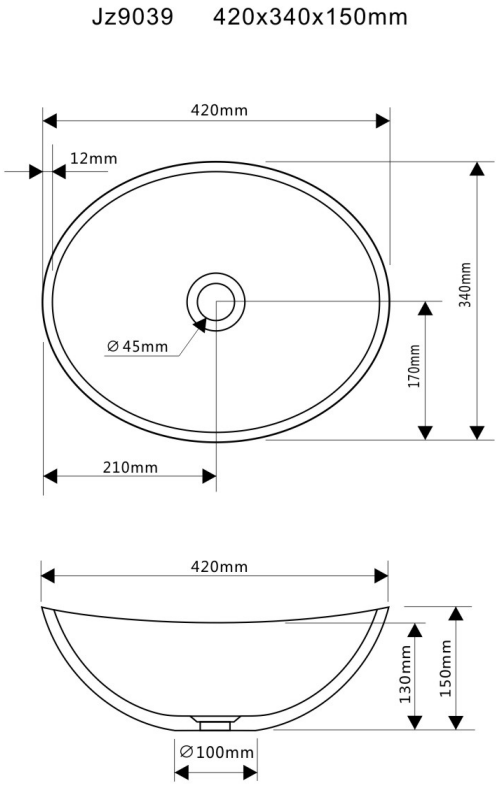

All dimensions are in mm. Drawings are not to scale. House of Piccadilly reserves the right to amend product specifications without prior notice.