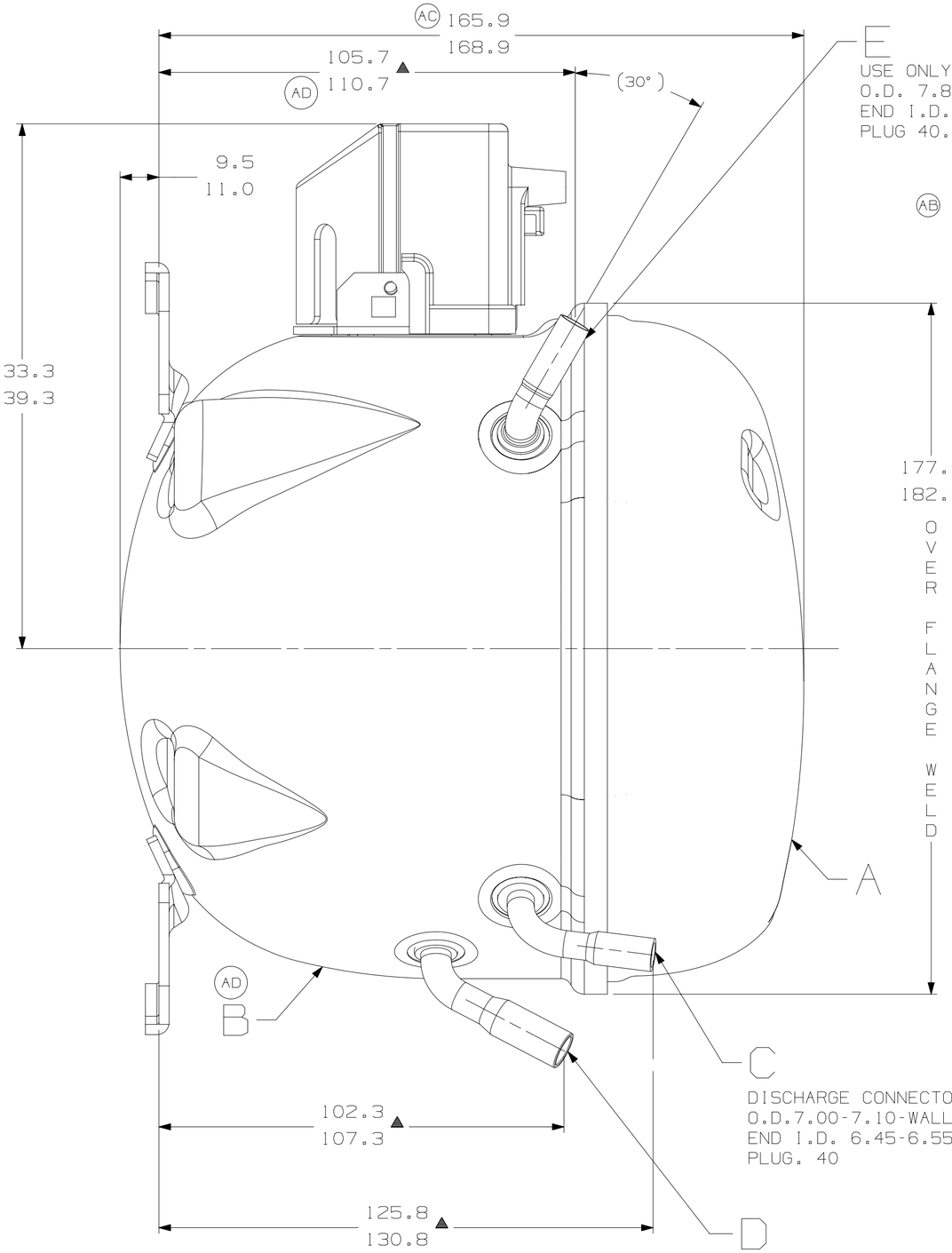

E
USE ONLY PROCESS CONNECTOR - COPPER
O.D. 7.89-7.99 - WALL 0.90-1.10
END I.D. 6.45-6.55 X 15.0-17.0 DEEP.
PLUG 40.

DISCHARGE CONNECTOR - COPPER
O.D.7.00-7.10-WALL 0.90-1.10
END I.D. 6.45-6.55 X 15.0-17.0 DEEP.
PLUG. 40

USE ONLY SUCTION CONNECTOR - COPPER
O.D. 7.89-7.99 - WALL 0.90-1.10
END I.D. 8.00-8.10 X 15.0-17.0 DEEP.
PLUG 3.

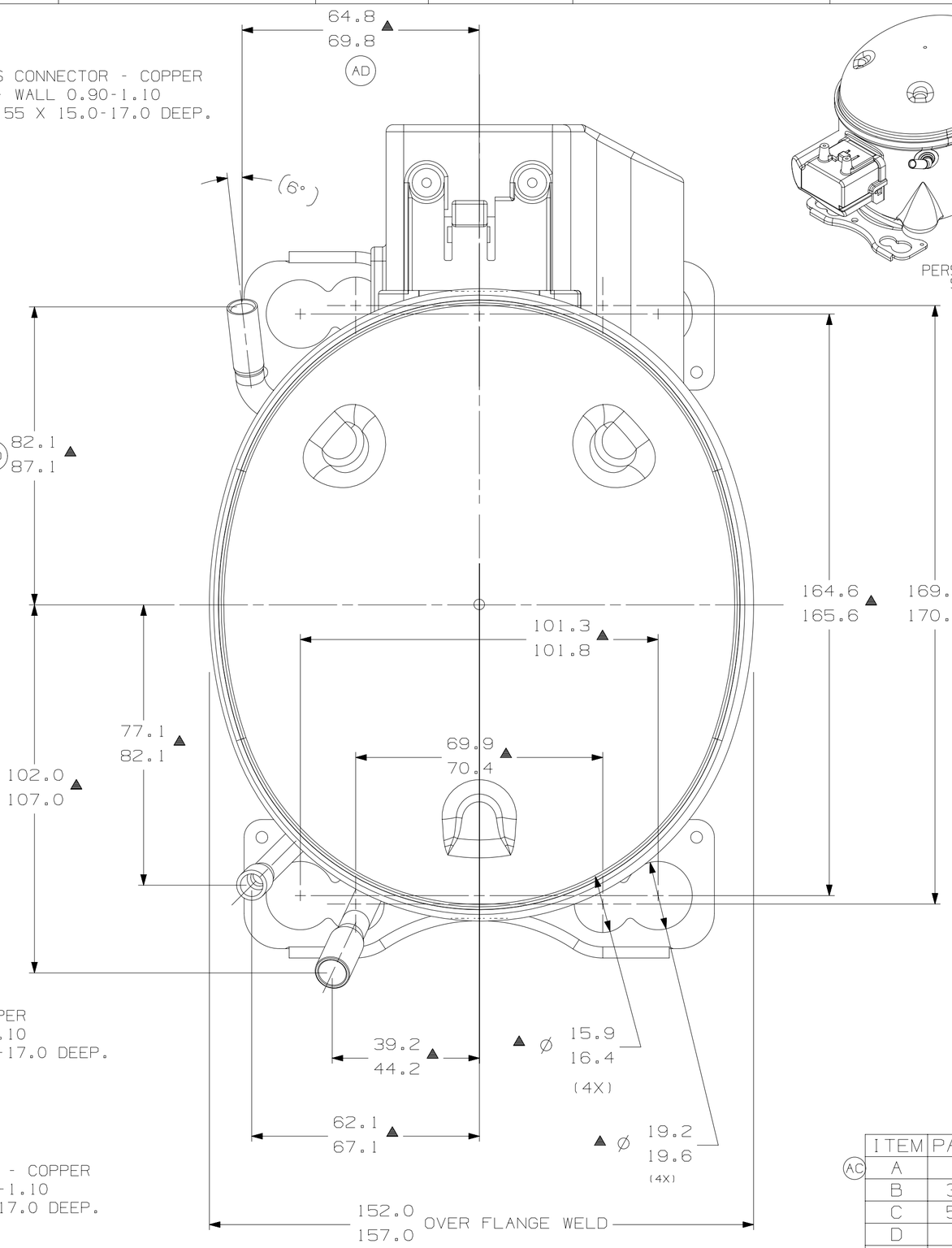

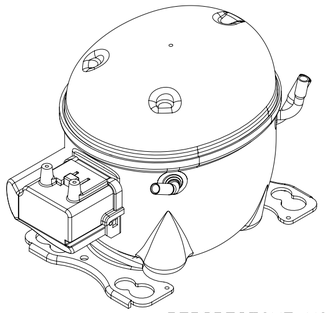

PERSPECTIVE VIEW
SCALE 1:3

ITEM	PART NUMBER
A	14962905
B	320-10523
C	580-10164
D	14963887
E	14947663

NOTES
1- IF SPECIFIED IN BM. ASSEMBLE PARTS AS SHOWN.
2- SEE SPEC. "A-B" & A-C FOR PROCESS.
3- FOR SUPPLIER ENVIRONMENTAL REGULATORY REQUIREMENTS, SEE TECUMSEH GLOBAL SPEC. 08
4- TUBES OF SUCTION, DISCHARGE AND PROCESS MUST BE FREE OF INK ON 15.8mm (5/8 ") FROM TOP OF THE TUBES AS SPEC. TECUMSEH AB-4.

		EC98010 12-07-21 CIAS. CS.	EC90671 25-06-19 CADEM R.	EC82134 08/06/2018 CADEM R.	EC65941 25-11-15 AMP MF	DATE
		ATUALIZADA 320-10523	ERA: 167.0-170.0 ERA: 320-10176 PASSOU PARA 14962905	RETIRADA AREA DE PINTURA DO FURO DO FENCE	LIBERACAO	CHANGE
		3F 5E 7F 8C	F7 B1	F5	--	LC
		AD	AC	AB	AA	LT

THIS DRAWING OR PRINT (I) IS THE PROPERTY OF TECUMSEH DO BRASIL LTDA. AND CONTAINS PROPRIETARY AND CONFIDENTIAL INFORMATION BELONGING TO TECUMSEH DO BRASIL. (II) IS MADE AVAILABLE TO THE RECIPIENT ON THE EXPRESS AND SPECIFIC CONDITION THAT NEITHER IT NOR THE INFORMATION CONTAINED THEREON OR DISCLOSED OR MADE AVAILABLE TO OTHERS WITHOUT THE EXPRESS AND SPECIFIC WRITTEN CONSENT OF TECUMSEH DO BRASIL AND THAT SUCH INFORMATION ONLY AS EXPRESSLY AND SPECIFICALLY APPROVED IN WRITING BY TECUMSEH DO BRASIL AND NOT OTHERWISE. (III) SHALL NOT BE COPIED OR TO ANY EXTENT WITHOUT TECUMSEH DO BRASIL PRIOR EXPRESS AND SPECIFIC WRITTEN CONSENT AND (IV) SHALL BE RETURNED TO THE ENTITY WHO MADE THE REQUEST PROMPTLY AFTER SUCH REQUEST IS MADE.

DO NOT SCALE THIS DRAWING. ALL FERROUS MATERIALS MUST NOT BE MAGNETIZED AS RECEIVED OR AT COMPRESSOR ASSEMBLY

THIRD ANGLE PROJECTION

UNITS: m

DRAWING SIZE

Q. A.SYMBOLS AS PROCEDURE 2.01.031 TECUMSEH OF BRAZIL

★ : CATEGORY I
▲ : CATEGORY II
■ : CATEGORY III
: CATEGORY IV

Tecumseh

NAME			PART NO.
SALES COMPRESSOR			DCTC038
DWN. A. MARCOS	CK. MARCOS FONTES	APR. WALTER CORREA	SCALE 1:1 / PAGE 1/1
DATE 15-06-15	REF.		FAMILY TC