A	LOWER HOUSING	BR32006
B	HOUSING ASSY	307082
C	UPPER HOUSING ASSY	320-10274
D	SUCTION ACCUMULATOR	BRAI2100-5 (AD)
E	MOUNTING BRACKET - FRONT	BR28148
F	MOUNTING BRACKET - BACK	BR28146
G	HEX NUT	11230
H	TERMINAL COVER	BR71068
J	TERMINAL COVER GASKET	BR30649-1

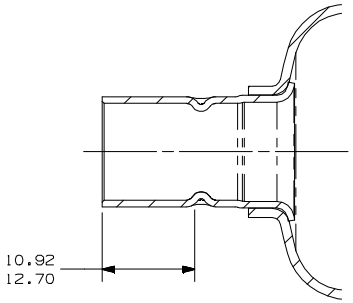

(AE) SECTION A-A
SCALE 2:1

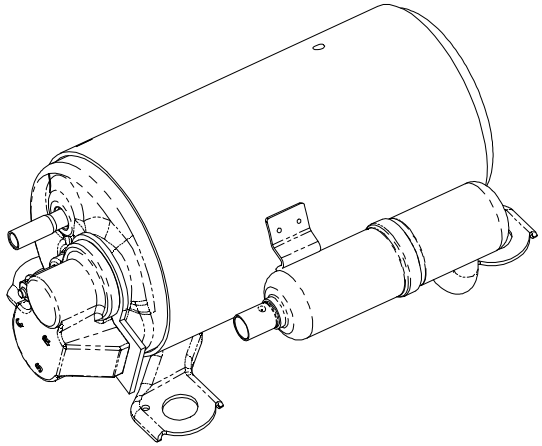

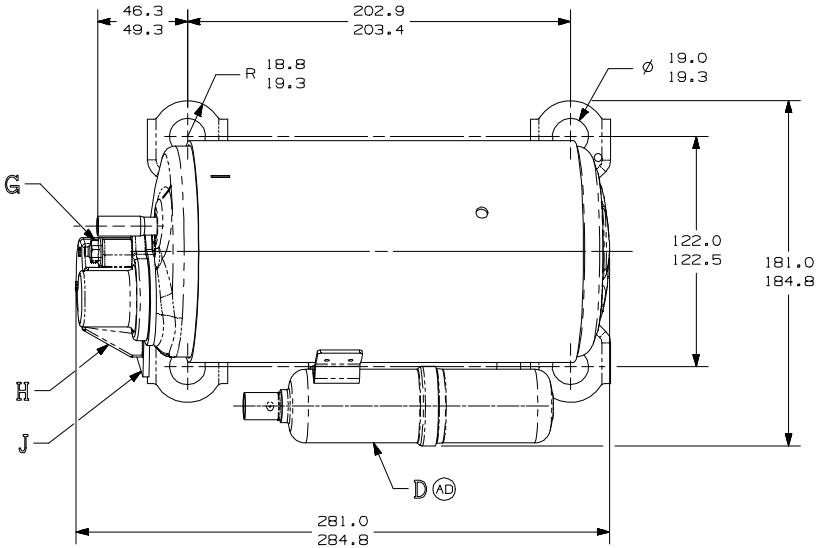

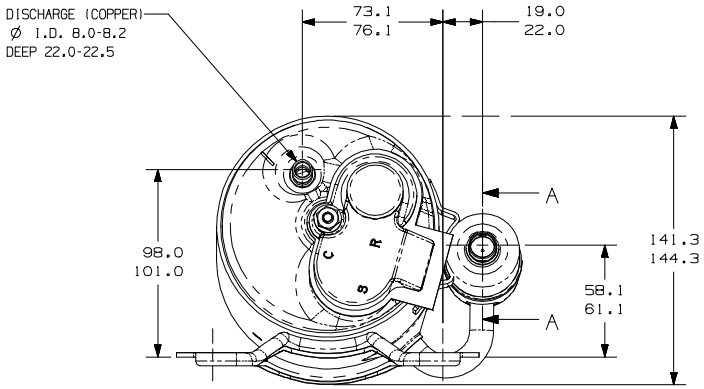

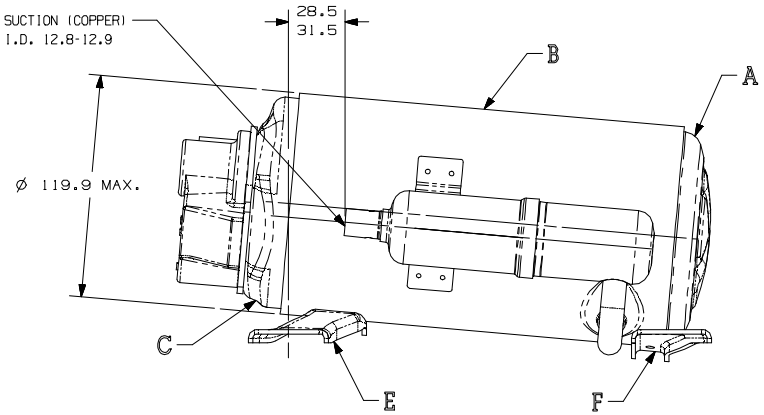

HG191

		EC81070 19-03-18 CADEM MS.	PRE-EC85153 13-05-15 CADEM M.	EC52538 25-09-14 CADEM MS.	EC52919 11-02-14 PS. MS.	--	DATE
		ACRESCENTADO CORTE A-A	ALTERADA LETRA D DA TABELA, ERA: BRAI2100-2	ALTERADO SUP. MONT., ERA: BR28146 E BR28138 E 10780-5	ALTERADA TAMPA SUP. MONTADA ERA: HA663	LIBERADO EM 29/05/02 CE-4993/02	CHANGE
AE	DB	AD	F7 D3	AC	AB	-- --	LT LC

THIS DRAWING OR PRINT (I) IS THE PROPERTY OF TECUMSEH DO BRASIL LTDA. AND CONTAINS PROPRIETARY AND CONFIDENTIAL INFORMATION BELONGING TO TECUMSEH DO BRASIL. (II) IS LOANED TO THE RECIPIENT FOR THE RECIPIENT'S EXPRESS AND SPECIFIC CONDITION THAT NEITHER IT NOR THE INFORMATION CONTAINED THEREIN OR DISCLOSED OR MADE AVAILABLE TO OTHERS WITHOUT THE EXPRESS, SPECIFIC, AND WRITTEN CONSENT OF TECUMSEH DO BRASIL AND THAT SUCH INFORMATION ONLY AS EXPRESSLY AND SPECIFICALLY APPROVED IN WRITING BY TECUMSEH DO BRASIL AND NOT OTHERWISE. (III) SHALL NOT BE COPIED OR TO ANY EXTENT WITHOUT TECUMSEH DO BRASIL PRIOR EXPRESS AND SPECIFIC WRITTEN CONSENT AND (IV) SHALL BE RETURNED BY THE RECIPIENT (LATTER'S REQUEST) PROMPTLY AFTER SUCH REQUEST IS MADE.

DO NOT SCALE THIS DRAWING. ALL TOLERANCES, MATERIALS MUST NOT BE MAGNETIZED AS RECEIVED OR AT COMPRESSOR ASSEMBLY

THIRD ANGLE PROJECTION

UNITS: mm

DRAWING SIZE: A2

D. A.SYMBOLS AS PROCEDURE 2.01.031 TECUMSEH OF BRAZIL

★ : CATEGORY I
▲ : CATEGORY II
■ : CATEGORY III
: CATEGORY IV

Tecumseh

NAME SALES COMPRESSOR			PART NO. DCHG105	
DWN. EDSON	CK. A. ZANATTA	APR. E. FREITAS	SCALE 1:2	PAGE 1/1
DATE 04/02/02	REF.		FAMILY HG	