Technical Data sheet

Sienna
Mono Basin Mixer

SIEN-312

15 Year Warranty

Specification

Brand	House Of Piccadilly
Range	Sienna
Product code	SIEN-312
Finish/Colour	Brushed Gold, Brushed Nickel
	Brushed Gunmetal, Chrome
Material	Brass
Connection Size	1/2"

Technical Information

Mono Basin Mixer & Universal Waste

Deck Mounted

Drill Hole Diameter ø35

Box contents:

Mono Basin Mixer & Universal Waste

Flow Rate Graph

Pressure (Bar)	L/min
0.1	1.52
0.2	2.67
0.3	3.45
0.4	4.06
0.5	5.03
1.0	7.09
2.0	8.85
3.0	9.95
4.0	10.8
5.0	12.67
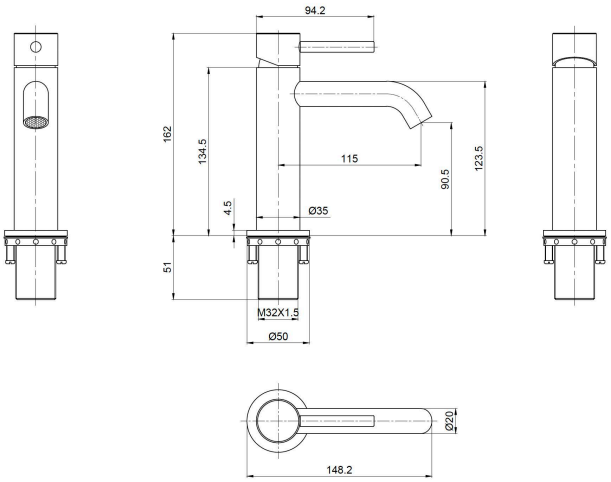
Drawing