Technical Data sheet

Sienna
Mono Basin Mixer

SIEN-314

15 Year Warranty

Specification

Brand	House Of Piccadilly
Range	Sienna
Product code	SIEN-314
Finish/Colour	Brushed Gold, Brushed Nickel
	Brushed Gunmetal, Chrome
Material	Brass
Connection Size	1/2"

Technical Information

Mono Basin Mixer & Universal Waste

Deck Mounted

Drill Hole Diameter ø35

Box contents:

Mono Basin Mixer & Universal Waste

Flow Rate Graph

Pressure (Bar)	L/min
0.1	1.64
0.2	2.72
0.3	3.5
0.4	4.2
0.5	5.13
1.0	7.26
2.0	8.92
3.0	10
4.0	10.9
5.0	12.8
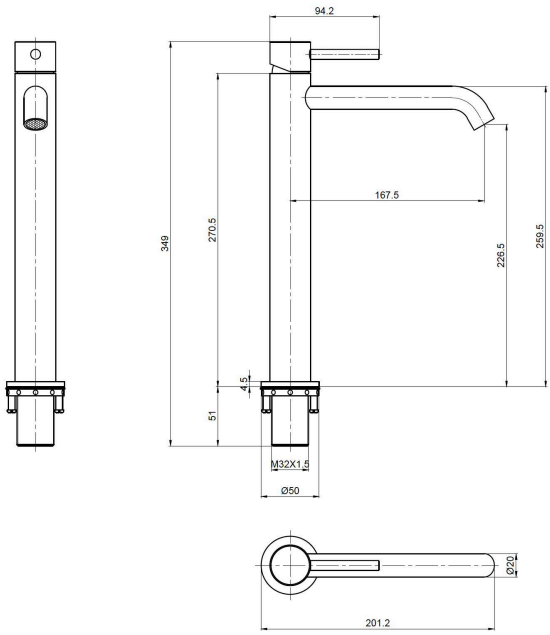
Drawing