Technical Data sheet

Sienna
Wall Mounted Basin Mixer

SIEN-313

15 Year Warranty

Specification

Brand	House Of Piccadilly
Range	Sienna
Product code	SIEN-313
Finish/Colour	Brushed Gold, Brushed Nickel
	Brushed Gunmetal, Chrome
Material	Brass
Connection Size	1/2"

Technical Information

Wall Mounted Basin Mixer

Wall Mounted

Drill Hole Diameter ø46 Valve, ø24 Spout

Box contents:

Wall Mounted Basin Mixer

Flow Rate Graph

Pressure (Bar)	L/Min
0.5	4.6L/Min
1.0	7.2L/Min
2.0	11.0L/Min
3.0	13.3L/Min
4.0	15.0L/Min
5.0	16.9L/Min
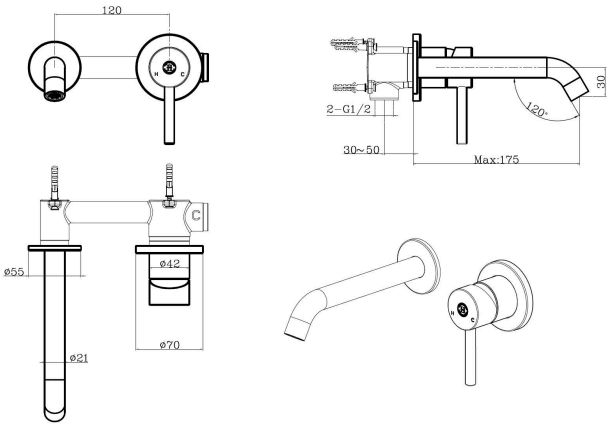
Drawing