Technical Data sheet

Sienna
Wall Mounted Bath Mixer

SIEN-411

15 Year Warranty

Specification

Brand	House Of Piccadilly
Range	Sienna
Product code	SIEN-411
Finish/Colour	Brushed Gold, Brushed Nickel
	Brushed Gunmetal, Chrome
Material	Brass
Connection Size	1/2"

Technical Information

Wall Mounted Bath Mixer

Wall Mounted

Drill Hole Diameter ø46 Valve, ø26 Spout

Box contents:

Wall Mounted Bath Mixer

Flow Rate Graph

Pressure (Bar)	L/Min
0.5	7.2L/Min
1.0	11.3L/Min
2.0	16.9L/Min
3.0	20.8L/Min
4.0	23.2L/Min
5.0	25.2L/Min

Drawing

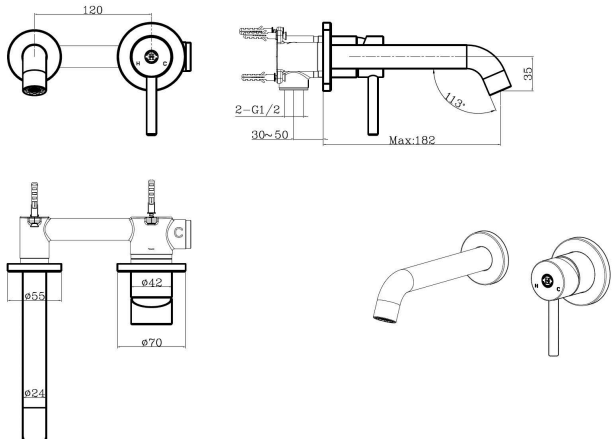

For more information about this product or to visit our full product range please contact us 01904 233113 | sales@houseofpiccadilly.com

www.houseofpiccadilly.com