Technical Data sheet

Sienna
2 Hole Deck Mounted Bath Filler

SIEN-413

15 Year Warranty

Specification

Brand	House Of Piccadilly
Range	The Sienna
Product code	SIEN-413
Finish/Colour	Chrome, Brushed Gold
	Gunmetal, Brushed Nickel
Material	Brass
Connection Size	3/4"

Technical Information

2 Hole Deck Mounted Bath Filler

Box contents:

2 Hole Deck Mounted Bath Filler

Flow Rate

Pressure (Bar)	Average Flow Rate
0.5	9.4L/min
1	13.7L/min
2	20.8L/min
3	25.5L/min
4	28.9L/min
5	33.5L/min
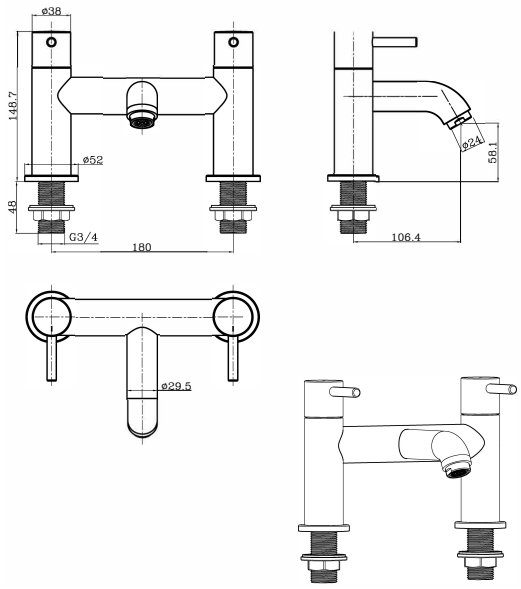
Drawing