Technical Data sheet

Harley
Mono Basin Mixer

HARLEY-312

15 Year Warranty

Specification

Brand	House Of Piccadilly
Range	Harley
Product code	HARLEY-312
Finish/Colour	Chrome
Material	Brass
Connection Size	1/2"

Technical Information

Mono Basin Mixer & Universal Waste

Deck Mounted

Drill Hole Diameter ø

Box contents:

Mono Basin Mixer & Universal Waste

Flow Rate Graph

Pressure (Bar)	L/min
0.1	1.21
0.2	2.05
0.3	2.71
0.4	3.2
0.5	3.53
1.0	5.37
2.0	7.72
3.0	9.65
4.0	10.97
5.0	12.45

Drawing

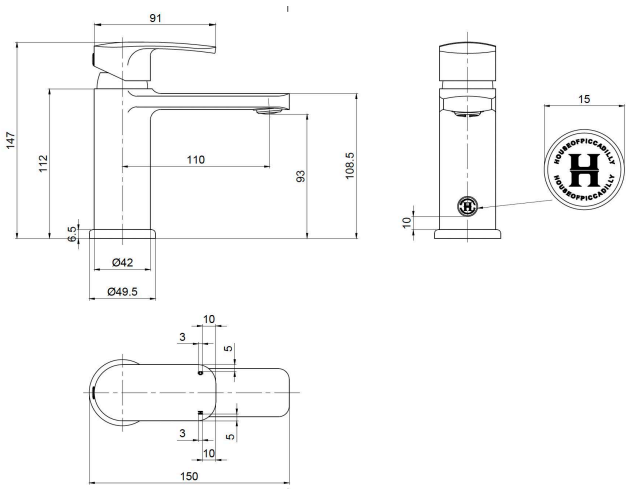

For more information about this product or to visit our full product range please contact us 01904 233113 | sales@houseofpiccadilly.com

www.houseofpiccadilly.com