Technical Data sheet

Harley
Wall Mounted Basin Mixer

HARLEY-311

15 Year Warranty

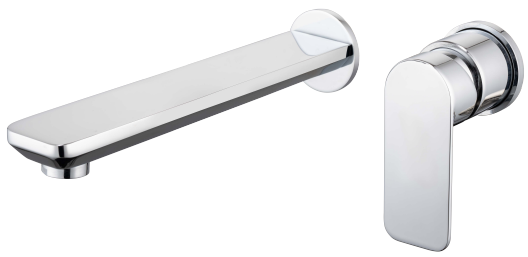

Specification

Brand	House Of Piccadilly
Range	Harley
Product code	HARLEY-312
Finish/Colour	Chrome
Material	Brass
Connection Size	1/2"

Technical Information

Wall Mounted Basin Mixer

Wall Mounted

Drill Hole Diameter ø46 Valve, 38ø Spout

Box contents:

Wall Mounted Basin Mixer

Flow Rate Graph

Pressure (Bar)	L/min
0.1	0.89
0.2	1.65
0.3	2.1
0.4	2.28
0.5	2.6
1.0	3.6
2.0	4.18
3.0	4.25
4.0	4.45
5.0	4.8
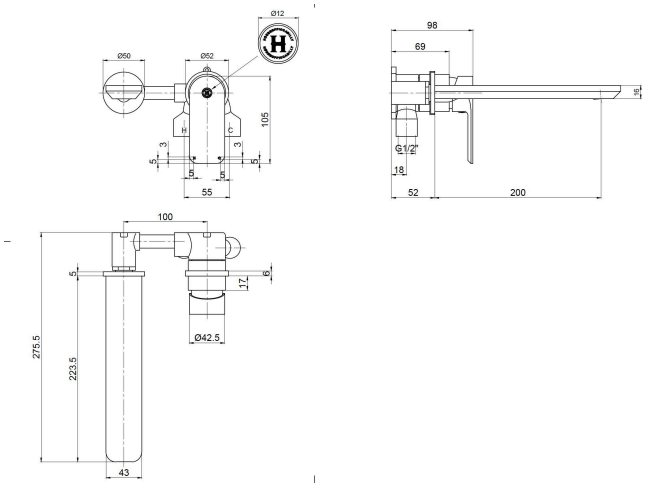
Drawing