Technical Data sheet

Harley
Deck Mounted Bath Filler

HARLEY-413

15 Year Warranty

Specification

Brand	House Of Piccadilly
Range	Harley
Product code	HARLEY-413
Finish/Colour	Chrome
Material	Brass
Connection Size	3/4"

Technical Information

Deck Mounted Bath Filler

Deck Mounted

Drill Hole Diameter ø30

Box contents:

Deck Mounted Bath Filler

Flow Rate Graph

Pressure (Bar)	L/min
0.1	2.34
0.2	3.54
0.3	4.67
0.4	5.56
0.5	6.24
1.0	9.3
2.0	13.37
3.0	16.59
4.0	19.17
5.0	21.54
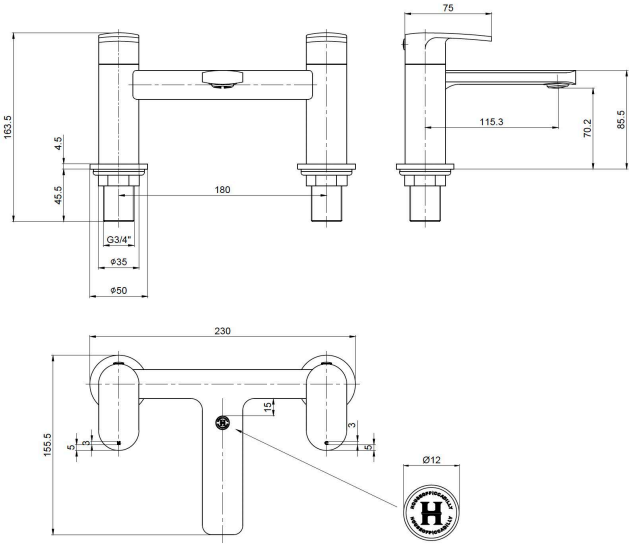
Drawing