Technical Data sheet

Harley
Deck Mounted Bath Filler & Shower

HARLEY-411

15 Year Warranty

Specification

Brand	House Of Piccadilly
Range	The Harley
Product code	HARLEY-411
Finish/Colour	Chrome
Material	Brass
Connection Size	3/4"

Technical Information

Deck Mounted Bath Filler

Deck Mounted

Box contents:

Deck Mounted Bath Filler

Flow Rate Graph

Pressure (Bar)	L/min
0.1	2.34
0.2	3.54
0.3	4.5
0.4	5.3
0.5	6.1
1.0	9
2.0	13.2
3.0	16.4
4.0	18.9
5.0	20.5

Drawing

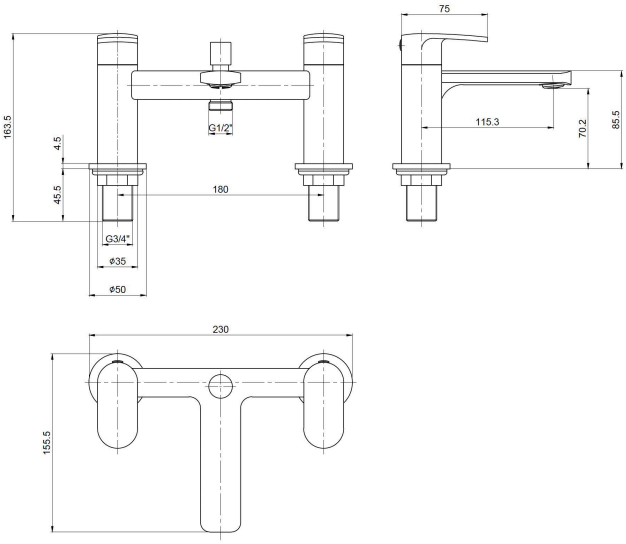

For more information about this product or to visit our full product range please contact us 01904 233113 | sales@houseofpiccadilly.com

www.houseofpiccadilly.com