Technical Data sheet

HOP Box with Square Face Plate Showering

SHOW-253

15 Year Warranty

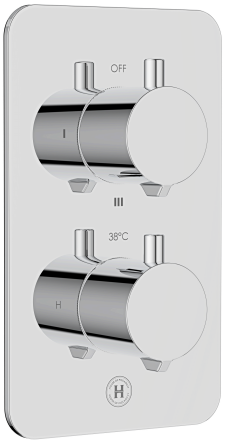

Specification

Brand	House Of Piccadilly
Range	Showering
Product code	SHOW-253
Finish/Colour	Chrome, Matt Black, Brushed Gold
	Brushed Gunmetal, Brushed Nickel
Material	Brass / ABS

Technical Information

Concealed Thermostatic Shower Valve Box

Drawing

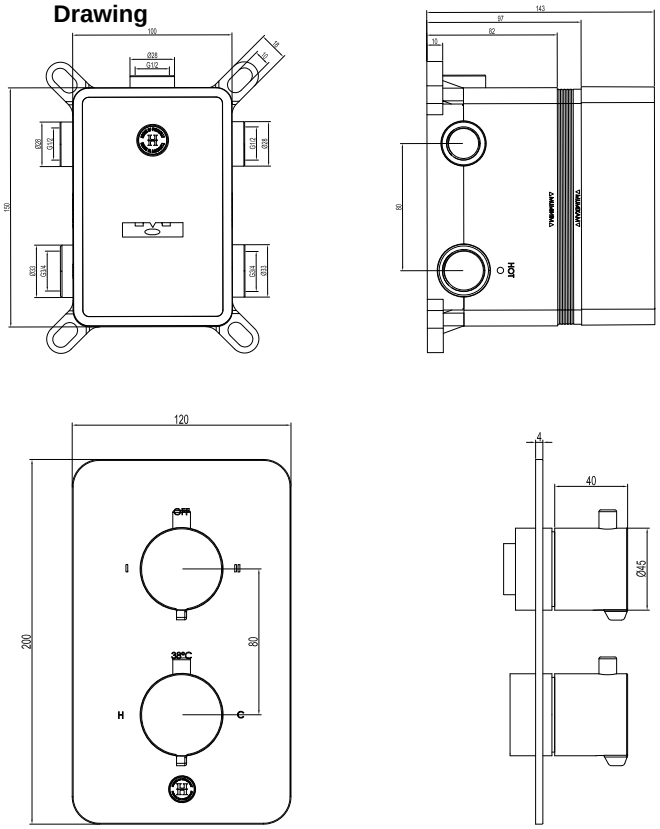

Box contents:

Concealed Thermostatic Shower Valve Box

Square Faceplate & Smooth Handles

Flow Rate Graph

NO.	Product Code	SHOW-222-VALVE			
	Supply Water Temperature		Cold Water（10-15）℃,Hot Water（60-65）℃		
	Cold Water Pressure（Bar)	Hot Water Pressure（Bar)	All Cold Water（L/min）	38℃（L/min）	All Hot Water（L/min）
1	0.5	0.5	8.4	10.5	7.6
2	1	1	12.1	15.2	10.9
3	2	2	17.2	21.9	15.5
4	3	3	21.1	27	19
5	4	4	24.2	31.3	22.1
6	5	5	27.3	34.8	24.7

Technical Data sheet

HOP Box with Square Face Plate Showering

SHOW-253

15 Year Warranty

Specification

Brand	House Of Piccadilly
Range	Showering
Product code	SHOW-253
Finish/Colour	Chrome, Matt Black, Brushed Gold
	Brushed Gunmetal, Brushed Nickel
Material	Brass / ABS

Technical Information

Concealed Thermostatic Shower Valve Box

Box contents:

Concealed Thermostatic Shower Valve Box

Drawing

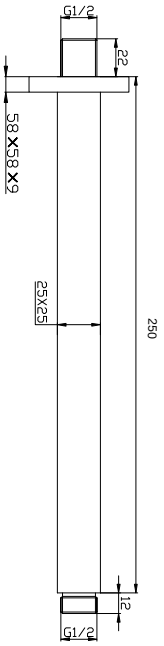

Technical Data sheet

HOP Box with Square Face Plate Showering

SHOW-253

15 Year Warranty

Specification

Brand	House Of Piccadilly
Range	Showering
Product code	SHOW-253
Finish/Colour	Chrome, Matt Black, Brushed Gold
	Brushed Gunmetal, Brushed Nickel
Material	Brass / ABS

Technical Information

Concealed Thermostatic Shower Valve Box

Box contents:

Concealed Thermostatic Shower Valve Box

Square Faceplate & Smooth Handles

Flow Rate Graph

Pressure (Bar)	Average Flow Rate
1	7.5L/min
2	11L/min
3	13.5L/min
4	15.5L/min
5	17.2L/min

Drawing

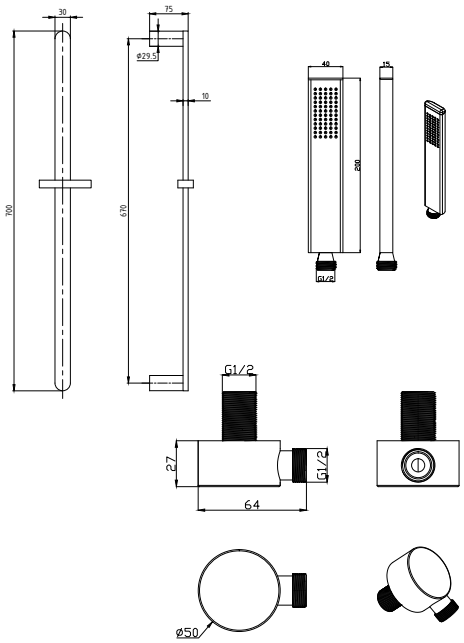

For more information about this product or to visit our full product range please contact us 01904 233113 | sales@houseofpiccadilly.com

www.houseofpiccadilly.com

Technical Data sheet

HOP Box with Square Face Plate Showering

SHOW-253

15 Year Warranty

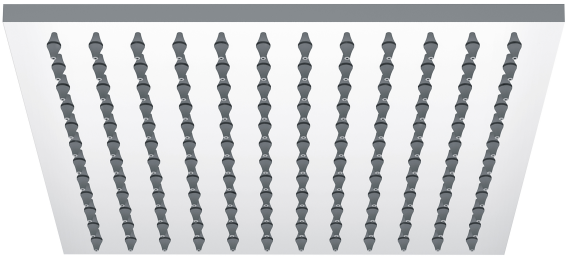

Specification

Brand	House Of Piccadilly
Range	Showering
Product code	SHOW-253
Finish/Colour	Chrome, Matt Black, Brushed Gold
	Brushed Gunmetal, Brushed Nickel
Material	Brass / ABS

Technical Information

Concealed Thermostatic Shower Valve Box

Box contents:

Concealed Thermostatic Shower Valve Box

Flow Rate Graph

Pressure (Bar)	Average Flow Rate
1	9.5L/min
2	14.78L/min
3	18.23L/min
4	21.08L/min
5	23.67L/min
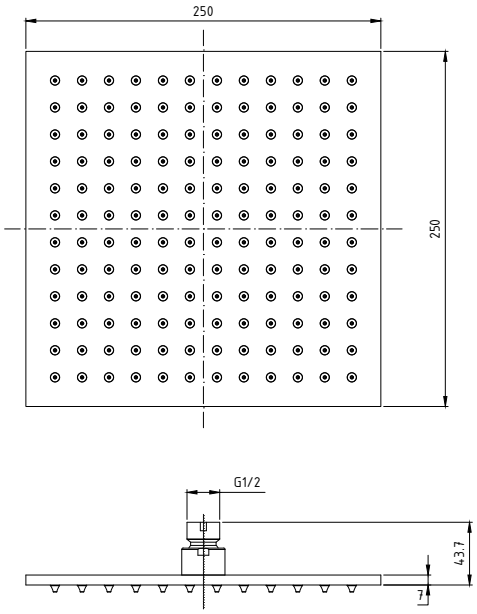
Drawing