Technical Data sheet

The Darcey Shower Arm & Head

DAR-212-PN

15 Year Warranty

Specification

Brand	House Of Piccadilly
Range	Darcey
Product code	DAR-212-PN
Finish/Colour	Polished Nickel
Product type	Shower Arm & Head
Material	Brass
Connection Size	1/2"

Technical Information

Shower Arm & Head
Drill Hole Diameter ø30

Box contents:

Shower Arm & Head

Flow Rate Graph

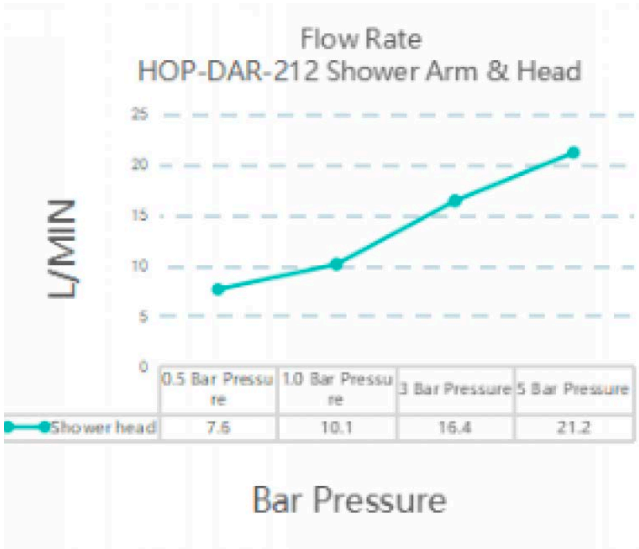

Drawing

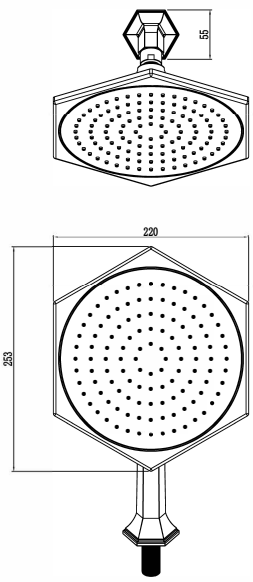

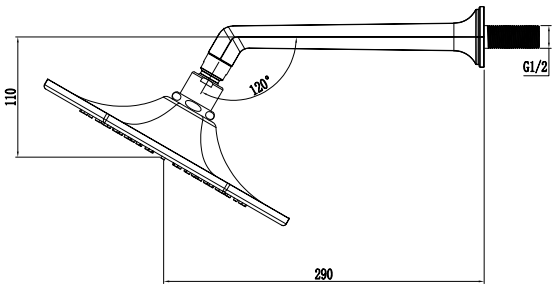

Technical Data sheet

The Darcey Shower Arm & Head

DAR-212-PN

15 Year Warranty

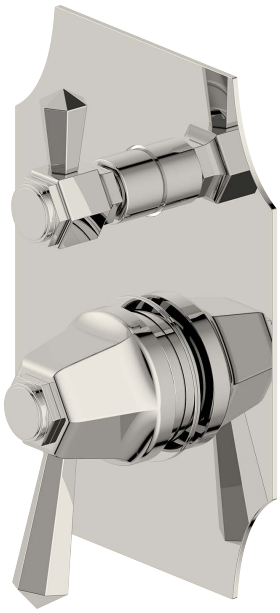

Specification

Brand	House Of Piccadilly
Range	Darcey
Product code	DAR-212-PN
Finish/Colour	Polished Nickel
Product type	Shower Arm & Head
Material	Brass
Connection Size	1/2"

Technical Information

Shower Arm & Head

Box contents:

Shower Arm & Head

Flow Rate Graph

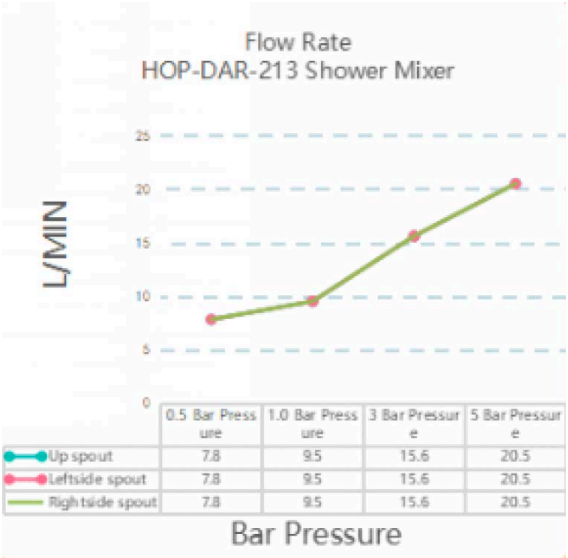

Drawing

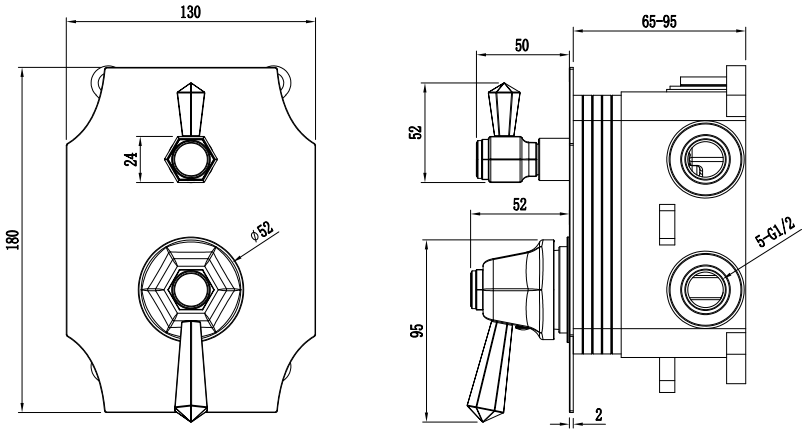

For more information about this product or to visit our full product range please contact us 01904 233113 | sales@houseofpiccadilly.com

www.houseofpiccadilly.com

Technical Data sheet

The Darcey Shower Arm & Head

DAR-212-PN

15 Year Warranty

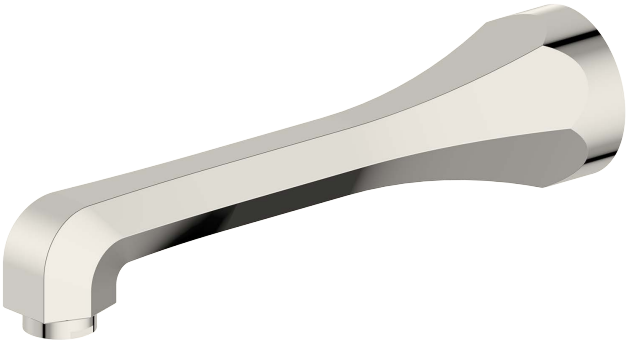

Specification

Brand	House Of Piccadilly
Range	Darcey
Product code	DAR-212-PN
Finish/Colour	Polished Nickel
Product type	Shower Arm & Head
Material	Brass
Connection Size	1/2"

Technical Information

Shower Arm & Head
Drill Hole Diameter ø30

Box contents:

Shower Arm & Head

Flow Rate Graph

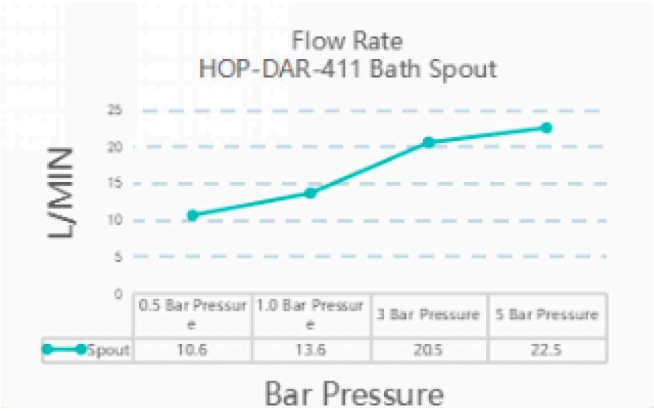

Drawing

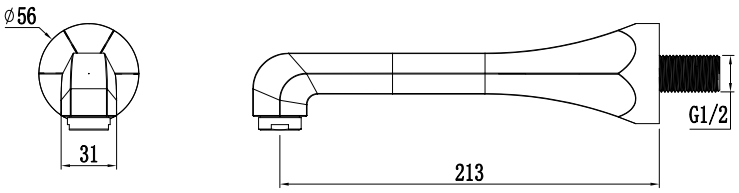

Technical Data sheet

The Darcey Shower Arm & Head

DAR-212-PN

15 Year Warranty

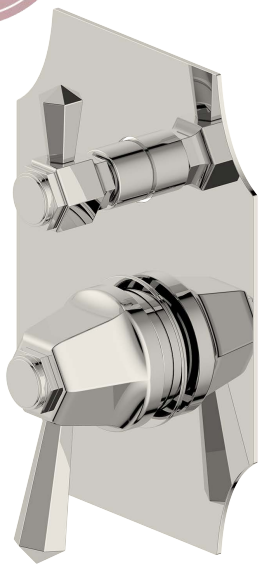

Specification

Brand	House Of Piccadilly
Range	Darcey
Product code	DAR-212-PN
Finish/Colour	Polished Nickel
Product type	Shower Arm & Head

Technical Information

Shower Arm & Head

Drawing

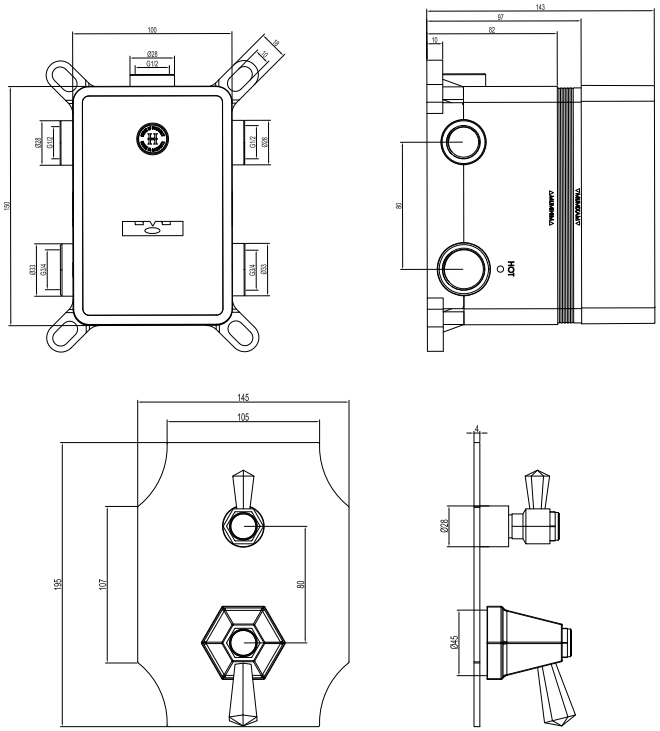

Box contents:

Shower Arm & Head

Drill Hole Diameter ø30

Flow Rate Graph

NO.	Product Code	SHOW-222-VALVE			
	Supply Water Temperature		Cold Water（10-15）℃,Hot Water（60-65）℃		
	Cold Water Pressure（Bar)	Hot Water Pressure（Bar)	All Cold Water（L/min）	38℃（L/min）	All Hot Water（L/min）
1	0.5	0.5	8.4	10.5	7.6
2	1	1	12.1	15.2	10.9
3	2	2	17.2	21.9	15.5
4	3	3	21.1	27	19
5	4	4	24.2	31.3	22.1
6	5	5	27.3	34.8	24.7

Technical Data sheet

The Darcey Shower Arm & Head

DAR-212-PN

15 Year Warranty

Specification

Brand	House Of Piccadilly
Range	Darcey
Product code	DAR-212-PN
Finish/Colour	Polished Nickel
Product type	Shower Arm & Head
Material	Brass
Connection Size	1/2"

Technical Information

Shower Arm & Head

Box contents:

Shower Arm & Head

Flow Rate Graph

Pressure (Bar)	Average Flow Rate (l/Min)
0.2	6.9L/min
0.5	11.2L/min
1	16.4L/min
2	24.5L/min
2.5	27.7L/min
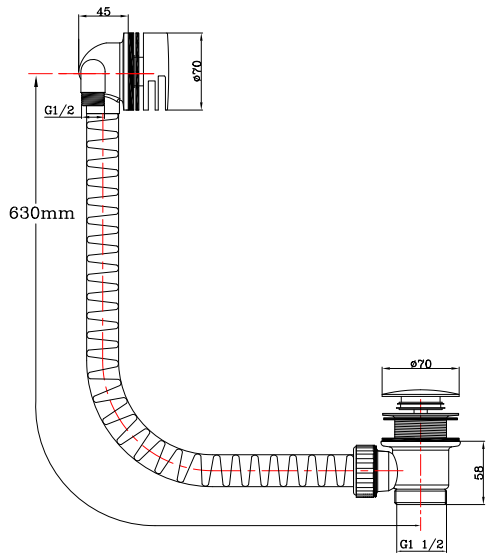
Drawing