Technical Data sheet

Square Slide Rail Shower Set Showering

SHOW-229

15 Year Warranty

Specification

Brand	House Of Piccadilly
Range	Showering
Product code	SHOW-229
Finish/Colour	Chrome, Brushed Gold, Matt Black
	Brushed Nickel, Brushed Gunmetal
Material	Brass

Technical Information

Square Slide Rail Shower Set

Box contents:

Square Slide Rail Shower Set

Slide Rail, Pencil Head, Hose

Flow Rate Graph

Pressure (Bar)	Average Flow Rate
1	7.5L/min
2	11L/min
3	13.5L/min
4	15.5L/min
5	17.2L/min
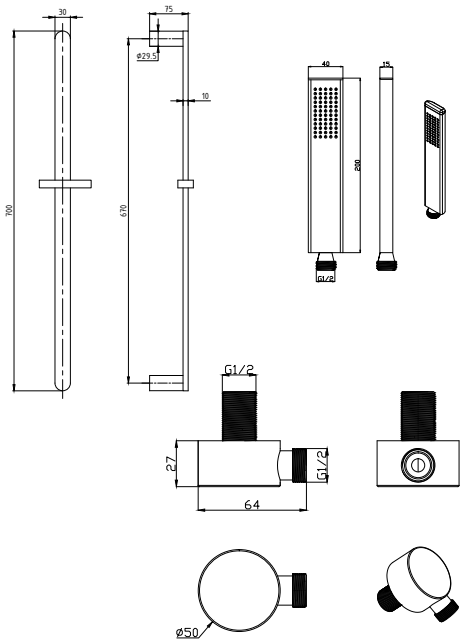
Drawing