Technical Data sheet

Round Manual Shower Valve Fittings

MAN-1-VALVE

15 Year Warranty

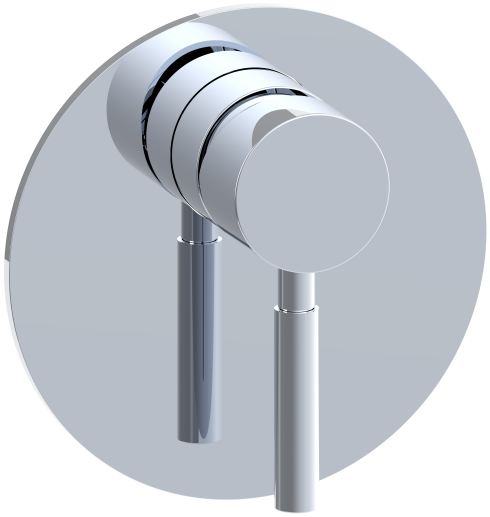

Specification

Brand	House Of Piccadilly
Range	Fittings
Product code	Manual Valve
Finish/Colour	Chrome, Matt Black
Product type	Brushed Gold, Gunmetal
	Brass
Connection Size	1/2"

Technical Information

Round Manual Valve

Box contents:

Round Manual Valve

Flow Rate Graph

Pressure (Bar)	Average Flow Rate (L/Min)
0.5	10.1L/Min
1	14.1L/Min
2	20.1L/Min
3	24.9L/Min
4	28.3L/Min
5	31.9L/Min
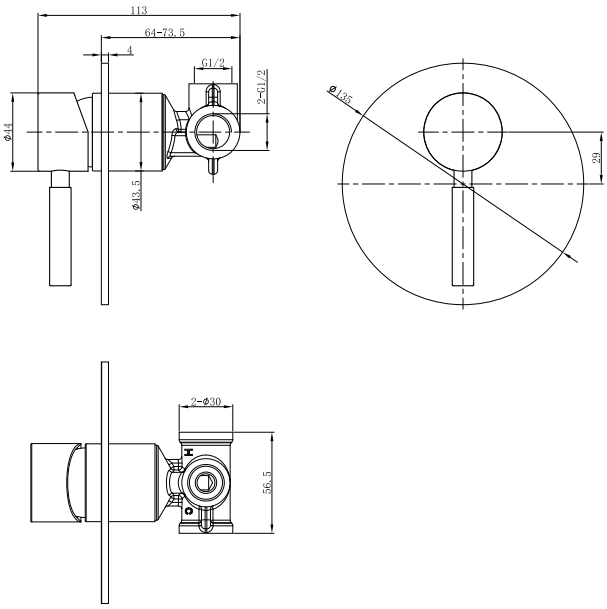
Drawing