Technical Data sheet

Fittings
Click Clack Bath Waste

ACC-113

15 Year Warranty

Specification

Brand	House of Piccadilly
Range	Fittings
Product code	ACC-113-CH
Finish/Colour	Chrome, Brushed Gunmetal
	Brushed Gold, Matt Black
Material	Brass / ABS
Connection Size	G 1/2"

Technical Information

Click Clack Bath Waste & Overflow

Box contents:

Click Clack Bath Waste & Overflow
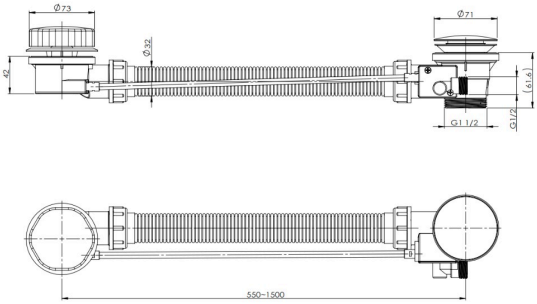
Drawing