Technical Data sheet

Manual Douche Kit Fittings

DOUCHE-

15 Year Warranty

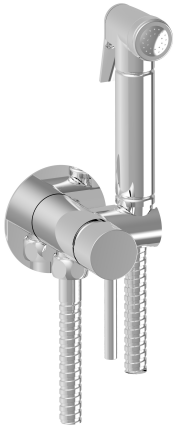

Specification

Brand	House Of Piccadilly
Range	Fittings
Product code	DOUCHE-
Finish/Colour	Chrome, Brushed Gold, Brushed Nickel
	Brushed Gunmetal, Matt Black
Material	Brass
Connection Size	1/2"

Technical Information

Pull-out Handset

Box contents:

Pull-out Handset

Flow Rate Graph

Pressure (Bar)	Average Flow Rate (L/Min)
0.5	3.1L/Min
1	4.7L/Min
2	6.8L/Min
3	8.7L/Min
4	9.8L/Min
5	11.3L/Min
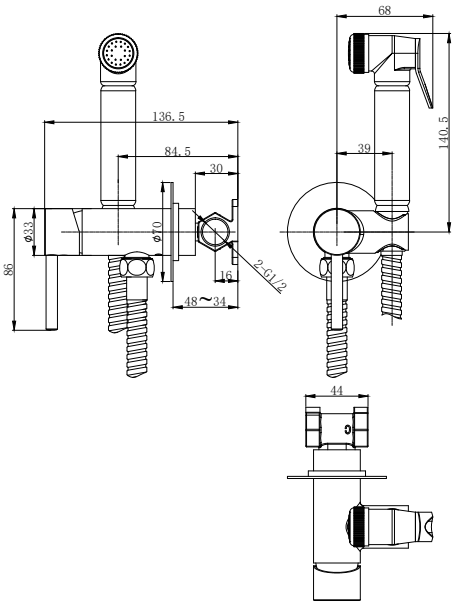
Drawing