Technical Data sheet

Fittings
Overflow Ring

OFRING

15 Year Warranty

Specification

Brand	House Of Piccadilly
Range	Overflow Ring
Product code	OFRING
Finish/Colour	Brushed Gold, Chrome
	Matt Black, Brushed Gunmetal
Material	ABS Plastic

Technical Information

Overflow Ring

Box contents:

Overflow Ring
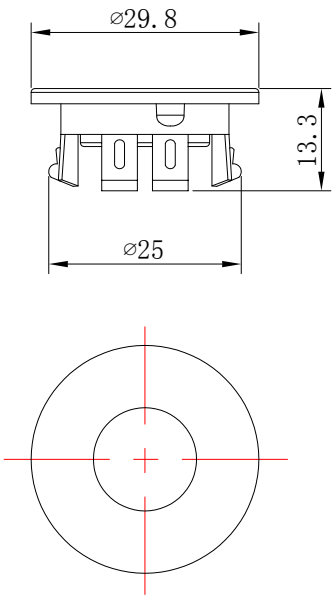
Drawing