Technical Data sheet

# ABS Flush Plate
# Frames, Cisterns & Plates

FLPL

2 Year Warranty

## Specification

| | |
|---|---|
| Brand | House of Piccadilly |
| Range | Frames, Cisterns & Plates |
| Product code | FLPL |
| Colour | Brushed Gold, Chome, Matt Black, Brushed Nickel Brushed Gunmetal |
| Material | ABS |

## Box Content

Flush Plate & Connectors
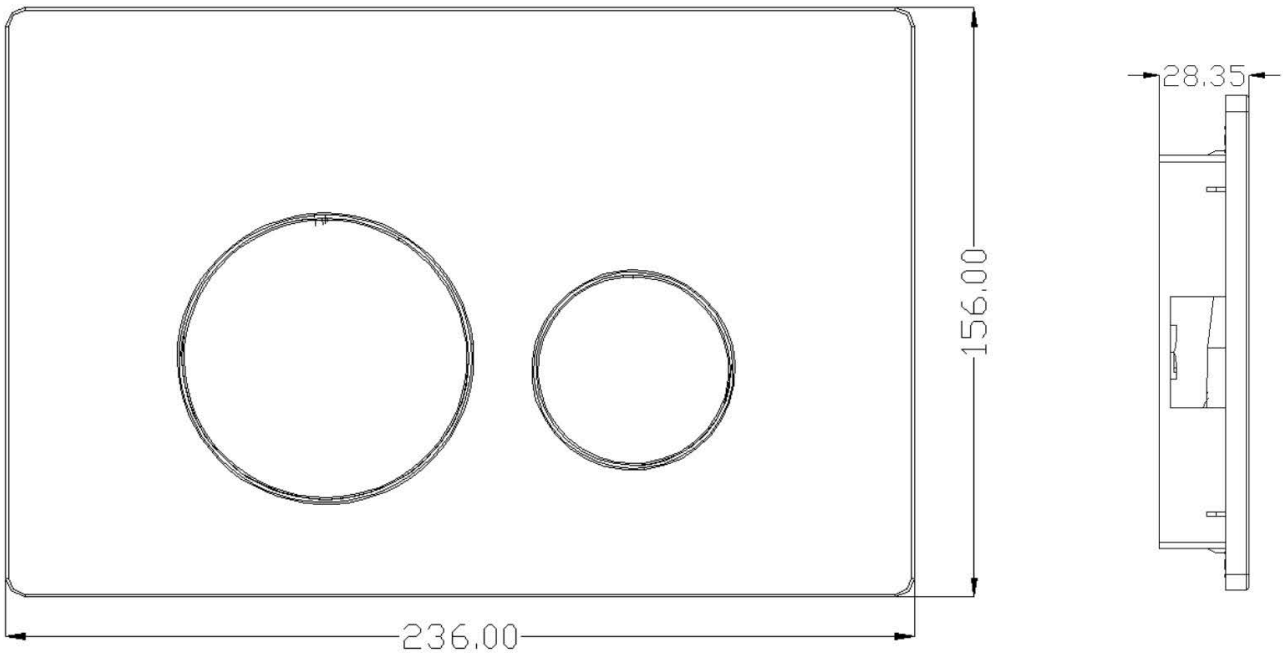
## Drawing