Technical Data sheet

HOP Box with Round Face Plate Showering

SHOW-251

15 Year Warranty

Specification

Brand	House Of Piccadilly
Range	Showering
Product code	SHOW-251
Finish/Colour	Chrome, Brushed Gold Matt Black
	Brushed Gunmetal, Brushed Nickel
Material	Brass / ABS

Technical Information

Concealed Thermostatic Shower Valve Box

Drawing

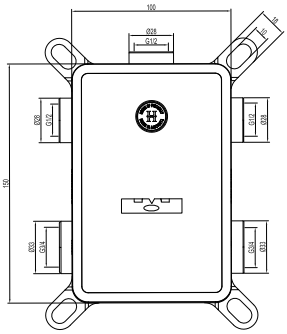

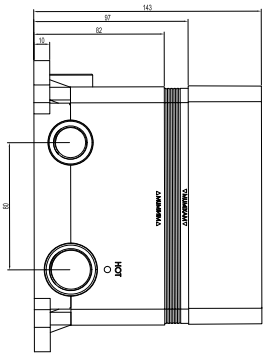

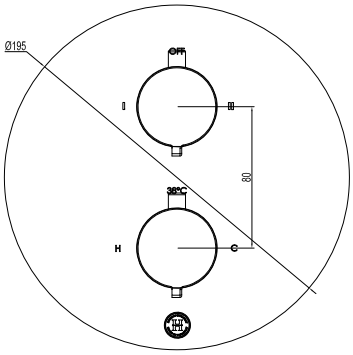

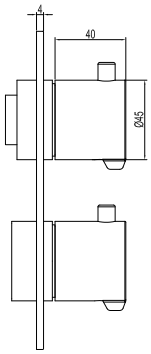

Box contents:

Concealed Thermostatic Shower Valve Box

Round Faceplate & Smooth Handles

Flow Rate Graph

NO.	Product Code	SHOW-222-VALVE			
	Supply Water Temperature		Cold Water（10-15）℃,Hot Water（60-65）℃		
	Cold Water Pressure（Bar)	Hot Water Pressure（Bar)	All Cold Water（L/min）	38℃（L/min）	All Hot Water（L/min）
1	0.5	0.5	8.4	10.5	7.6
2	1	1	12.1	15.2	10.9
3	2	2	17.2	21.9	15.5
4	3	3	21.1	27	19
5	4	4	24.2	31.3	22.1
6	5	5	27.3	34.8	24.7

Technical Data sheet

HOP Box with Round Face Plate Showering

SHOW-251

15 Year Warranty

Specification

Brand	House Of Piccadilly
Range	Showering
Product code	SHOW-251
Finish/Colour	Chrome, Brushed Gold Matt E
	Brushed Gunmetal, Brushed I
Material	Brass / ABS
Connection	1/2"

Technical Information

Concealed Thermostatic Shower Valve Box

Box contents:

Concealed Thermostatic Shower Valve Box

Flow Rate Graph

Pressure (Bar)	Average Flow Rate
1	10.3L/min
2	15.18L/min
3	18.91L/min
4	22L/min
5	24.83L/min

Drawing

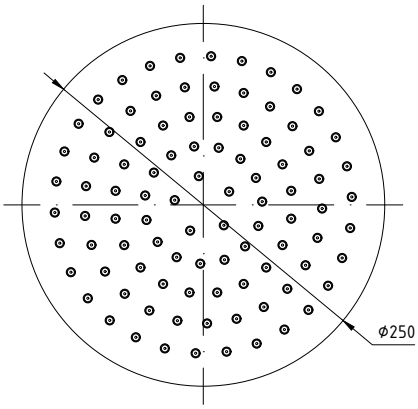

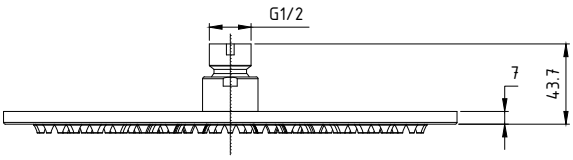

Technical Data sheet

HOP Box with Round Face Plate Showering

SHOW-251

15 Year Warranty

Specification

Brand	House Of Piccadilly
Range	Showering
Product code	SHOW-251
Finish/Colour	Chrome, Brushed Gold Matt Black
	Brushed Gunmetal, Brushed
Material	Brass / ABS

Technical Information

Concealed Thermostatic Shower Valve Box

Box contents:

Concealed Thermostatic Shower Valve Box

Flow Rate Graph

Pressue (Bar)	Flow Rate (L/mM)
0.5	7.1
1	10.7
2	15.4
3	19.2
4	22.2
5	25.1

Drawing

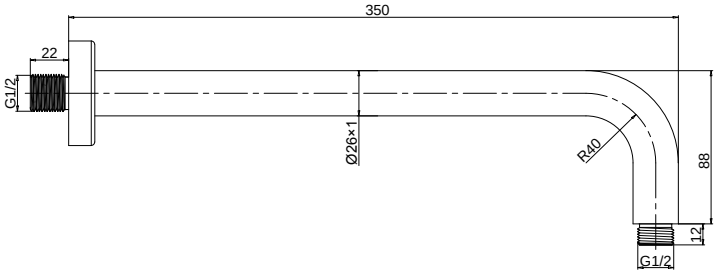

Technical Data sheet

HOP Box with Round Face Plate Showering

SHOW-251

15 Year Warranty

Specification

Brand	House Of Piccadilly
Range	Showering
Product code	SHOW-251
Finish/Colour	Chrome, Brushed Gold Matt Black
	Brushed Gunmetal, Brushed
Material	Brass / ABS

Technical Information

Concealed Thermostatic Shower Valve Box

Box contents:

Concealed Thermostatic Shower Valve Box

Round Faceplate & Smooth Handles

Flow Rate Graph

Pressue (Bar)	Flow Rate (L/mM)
0.5	7.1
1	10.7
2	15.4
3	19.2
4	22.2
5	25.1

Drawing

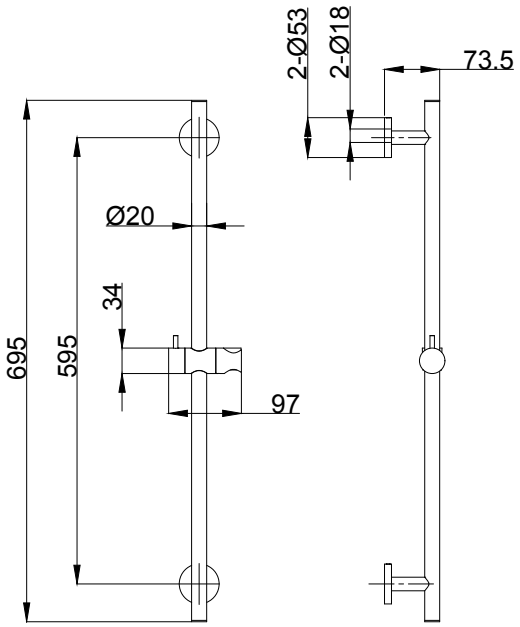

Technical Data sheet

HOP Box with Round Face Plate Showering

SHOW-251

15 Year Warranty

Specification

Brand	House Of Piccadilly
Range	Showering
Product code	SHOW-251
Finish/Colour	Chrome, Brushed Gold Matt Blac
	Brushed Gunmetal, Brushed Nicl
Material	Brass / ABS
1/2"	1/2"

Technical Information

Concealed Thermostatic Shower Valve Box

Box contents:

Concealed Thermostatic Shower Valve Box

Flow Rate Graph

Pressure (Bar)	Average Flow Rate (l/Min)
0.2	6.9L/min
0.5	11.2L/min
1	16.4L/min
2	24.5L/min
2.5	27.7L/min
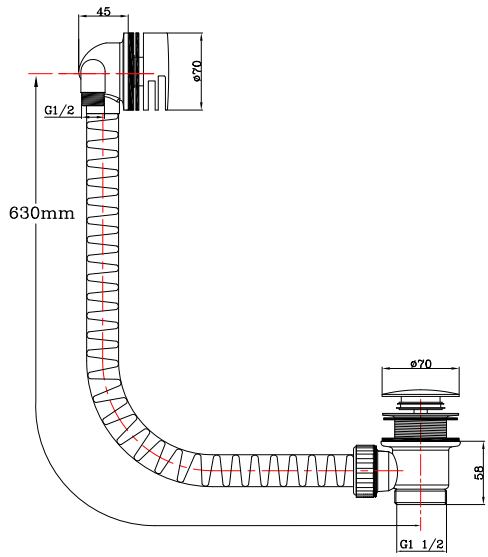
Drawing