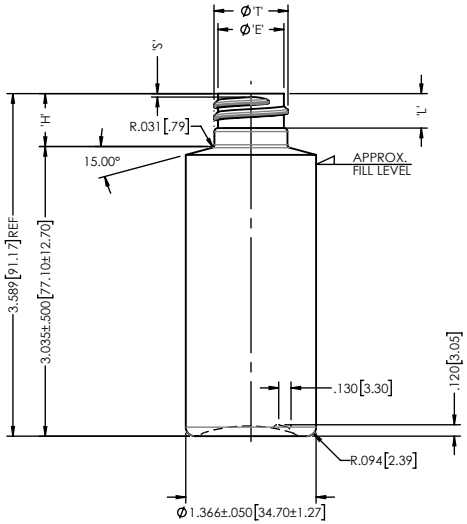

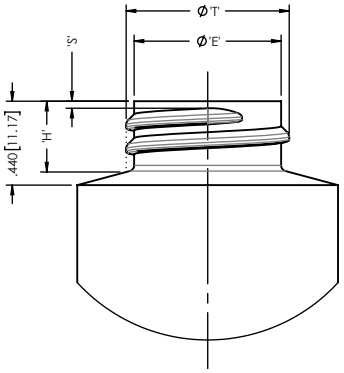

ALTERNATE NECK: M22-SP400
OAH: 3.388" ± 0.50

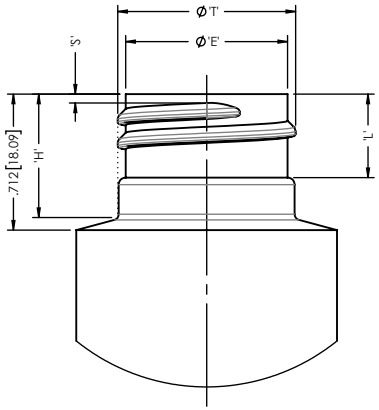

ALTERNATE NECK: M24-SP410
OAH: 3.660" ± 0.50

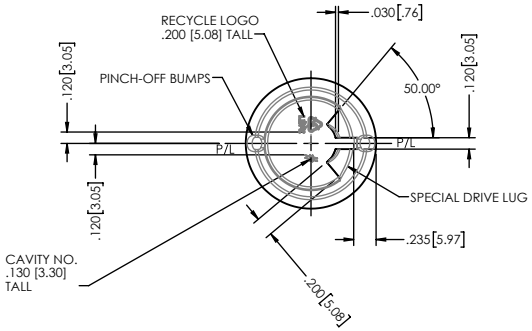

NO.	REV. BY	DESCRIPTION	DATE

NECK FINISH: M20-SP410			GRAM WT. 9g ± 1.5		
'T'	'E'	'H'	'S'	'L'	'W'
.775 ±.008	.691 ±.008	.554 ±.015	.037 ±.015	.361 MIN	———
19.69 ±0.20	17.55 ±0.20	14.07 ±0.38	0.94 ±0.38	9.14 MIN.	———
HELIX ∢: 3° 7'		T.P.I.: 8		CUTT. DIA.: .375 [9.53]	

NECK FINISH: M22-SP400		GRAM WT. 9g ± 1.5		OFC: 64ml ± 3.5
'T'	'E'	'H'	'S'	'L'
.854 ±.008	.770 ±.008	.371 ±.015	.037 ±.015	———
21.69 ±0.20	19.56 ±0.20	9.42 ±0.38	0.94 ±0.38	———
HELIX :∢ 2° 49'		T.P.I.: 8	CUTT. DIA.: .375[9.53]	

NECK FINISH: M24-SP410		GRAM WT. 9g ± 1.5		OFC: 67ml ± 3.5
'T'	'E'	'H'	'S'	'L'
.932 ±.008	.848 ±.008	.646 ±.015	.046 ±.015	.437 MIN.
23.67 ±0.20	21.54 ±0.20	16.41 ±0.38	1.17 ±0.38	11.10 MIN.
HELIX :∢ 2° 34'		T.P.I.: 8	CUTT. DIA.: .375[9.53]	

DRAWING CHECKED SPECIFICALLY FOR:
NECK FINISH .....
WEIGHT .....
CAPACITY .....
MATERIAL .....
SPECIAL REQUESTS .....

PRODUCT DESIGN TO BE APPROVED BEFORE MOULD CAVITIES ARE MACHINED.
APPROVED BY .....
DATE .....

This drawing subject to standard industry tolerances S.P.I.

CAPACITY TO FILL LEVEL BEFORE DECORATING	59ml ± 3
CAPACITY TO FILL LEVEL AFTER DECORATING	———
OVERFLOW CAPACITY BEFORE DECORATING	65ml ± 3.5
OVERFLOW CAPACITY AFTER DECORATING	———

CITADEL PACKAGING
CitadelPackaging.com · 208-550-3393

DRAWN BY: CML		DESC.	2oz LDPE CYLINDER
SCALE: 1:1	DATE: 27 MAY 16	DRAWING NO.	PB1450-MD
BOTTLE MAT'L: LDPE		MOULD NO.	----
CAD NAME:			

TEMPORARY DRAWING-NOT RELEASED FOR PRODUCTION

THIS IS A SUGGESTED DESIGN FOR CUSTOMER APPROVAL.
FINAL SIZES AND VOLUME ARE SUBJECT TO MOULDING
SPECIFICATIONS AND PRODUCTION QUALIFICATIONS.