Drawings

2 TON ELECTRIC CHAIN HOIST WITH EYE BOLT SUSPENSION

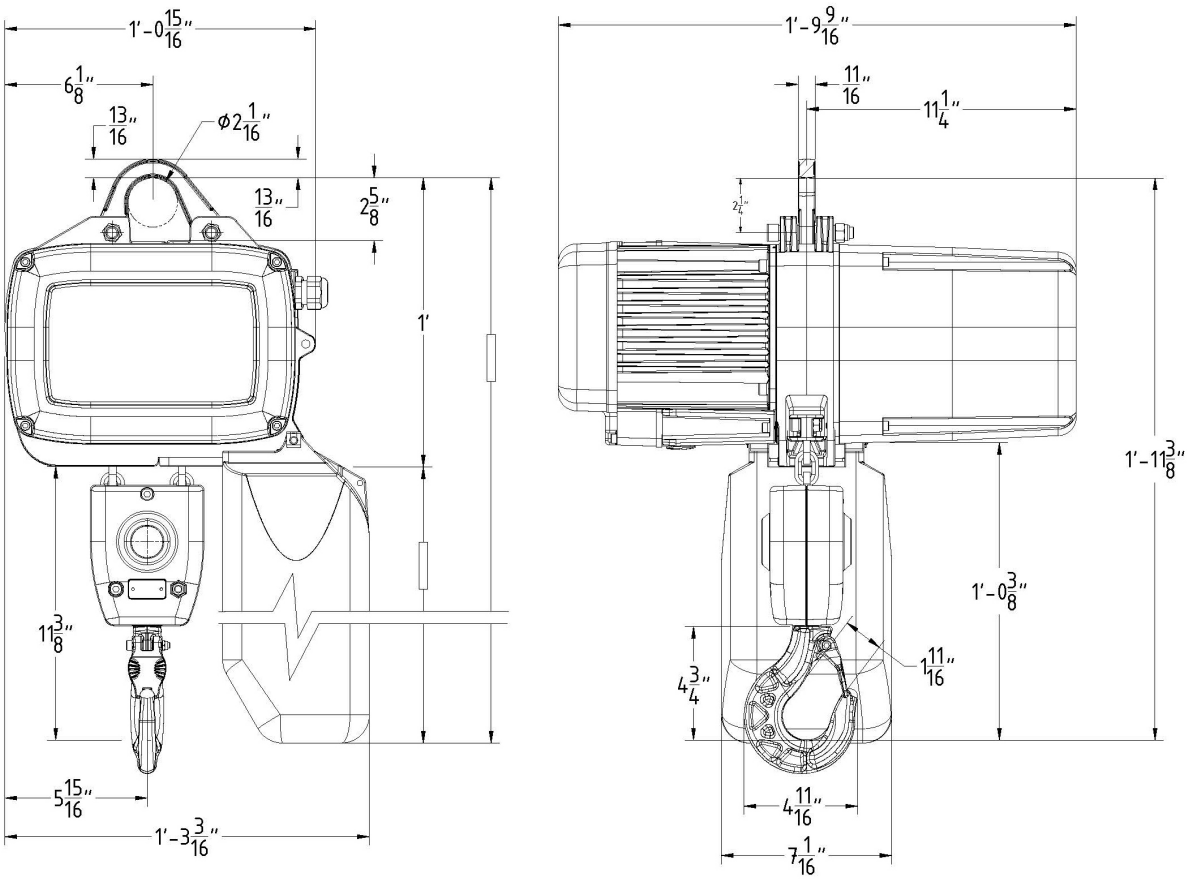

2 TON MANUAL TROLLEY

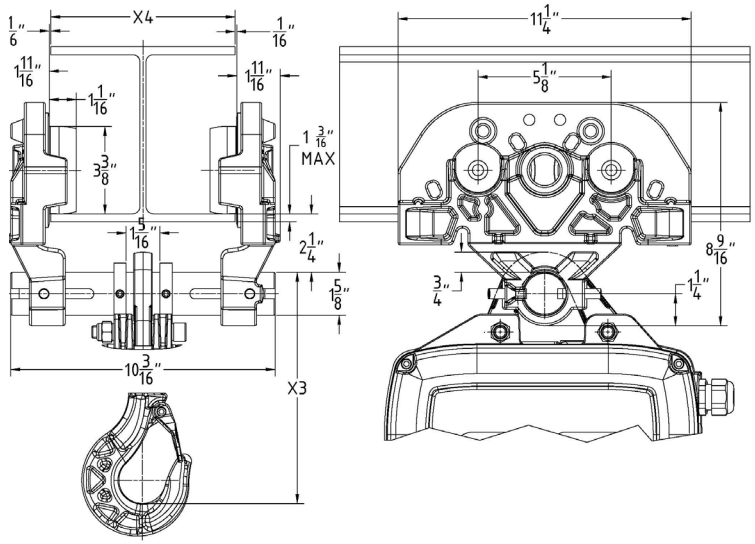

©2025, Promise to Perform Industries Inc. All rights reserved. All trademarks are the sole property of their respective owners. LA-WM2ET_0125